BID OPENING DATE AND TIME

ON: March 15, 2013 **AT: 10:30 A.M.**

BID NO.	PAGE	INVITATION AND BID ADVERTISED	BIDDER MUST COMPLETE BELOW
S3YC4880	1 OF 21		BIDDER AGREES TO COMPLY WITH ALL CONDITIONS OF THIS BID. UNSIGNED BIDS WILL NOT BE ACCEPTED.

This Invitation to Bid with your quotations must be received prior to the above cited bid opening date and time.

DEPARTMENT: **Streets** DIVISION: **Traffic Engineering**

AWARDED

DATE

FOR THE PROCUREMENT COMMISSIONER

BIDS MUST BE RETURNED TO

CITY OF PHILADELPHIA
PROCUREMENT DEPARTMENT
MUNICIPAL SERVICES BLDG.
1401 JFK BLVD, ROOM 170A
PHILADELPHIA, PA 19102-1685

NAME AND ADDRESS OF FIRM

Federal EIN/Social Security Number

BUYER : T. Vinson
J. Washington

TITLE OF: **Square Post System**

Commerce Department-Office of Economic Development (OEO)
Anti- Discrimination Policy
Executive Order 02-05 – Bidder Requirements

This Invitation to Bid is issued under the Anti-Discrimination Policy described in the Mayor's Executive Order, policy and guidelines as attached. Specific instructions must be adhered to, and forms completed. Bidders are advised to review the instructions carefully. Failure to comply may disqualify the bidder. The specified ranges represent the percentage of Minority, Woman and Disabled participation that should be attained by the Bidder.

Participation Ranges

M-BE: **GOOD FAITH EFFORTS**

W-BE: **GOOD FAITH EFFORTS**

DS-BE: **GOOD FAITH EFFORTS**

Any and all questions about Executive Order 02-05 and bidder compliance should be directed to the Commerce Department Office of Economic Opportunity (OEO) office at (215) 683- 2000.

BID QUESTIONS

All questions concerning this Invitation to Bid, including specifications and conditions, must be Presented prior to the bid opening date and time. Contact the Procurement Department, Public Information Center by calling **(215) 686-4721, 686-4720, or 686-4719** with questions.

For City Use Only

BID SECURITY See Conditions of Bidding	MASTER BID SECURITY		CERTIFIED CHECK SUBMITTED WITH BID	
	☐ YES	☐ NO	AMOUNT	CHECK NUMBER

CITY OF PHILADELPHIA
OFFICE OF ECONOMIC OPPORTUNITY
ANTIDISCRIMINATION POLICY- MINORITY, WOMAN AND DISABLED OWNED BUSINESS ENTERPRISES
FORMS, INSTRUCTIONS AND SPECIAL CONTRACT PROVISIONS
(SEALED BID CONTRACTS)

Under the authority of Executive Orders No. 02-05, as reauthorized, and 14-08, the City of Philadelphia has established an antidiscrimination policy ("Policy") relating to the participation of Minority (MBE), Woman (WBE) and Disabled (DSBE) Owned Business Enterprises in City contracts. Executive Order 14-08 disestablished the Minority Business Enterprise Council and transferred its administrative functions under Executive Order 02-05 to the Office of Economic Opportunity ("OEO").

The purpose of this Policy is to provide equal opportunity for all businesses and to assure that City funds are not used, directly or indirectly, to promote, reinforce or perpetuate discriminatory practices. The City is committed to fostering an environment in which all businesses are free to participate in business opportunities without the impediments of discrimination and participate in all City contracts on an equitable basis. In accordance with the contracting requirements of the City, the City's Policy is applicable to this Invitation and Bid (hereinafter, "Bid") .

The Office of Economic Opportunity has approved the following projected ranges of participation for this Bid which serve as a guide in determining each bidder's responsibility:

MBE: GOOD FAITH EFFORTS

WBE: GOOD FAITH EFFORTS

DSBE: GOOD FAITH EFFORTS

These ranges represent the percentage of MBE, WBE, DBE[1] and/or DSBE (collectively, "M/W/DSBE") participation that should be attained by M/W/DSBEs from business opportunities existing in the available market absent discrimination in the solicitation and selection of these businesses. These ranges are based upon an analysis of factors such as the size and scope of the contract and the availability of certified M/W/DSBEs to perform various elements of the contract. The submission of a Solicitation For Participation and Commitment Form and any supporting documentation (more fully discussed below) is an element of responsiveness to the Bid and failure to submit the required information will result in rejection of your bid.

Bidder hereby verifies that all forms, information and documentation submitted to the OEO are true and correct and is notified that the submission of false information by Bidder is subject to the penalties of 18 Pa.C.S. Section 4904 relating to unsworn falsification to authorities. Bidder also acknowledges that if it is awarded a contract resulting from this Invitation and Bid, it is a felony in the third degree under 18 Pa.C.S. Section 4107.2(a)(4) if, in the course of this contract,

[1] "DBE" or "Disadvantaged Business Enterprise" means a socially and economically disadvantaged minority or woman owned business that is certified under 49 C.F.R. Part 26. If Bidder makes solicitation(s) and commitment(s) with a DBE, Bidder shall indicate which category, MBE or WBE, is submitted for credit.

it fraudulently obtains public moneys reserved for or allocated or available to minority business enterprises or women's business enterprises.

A. M/W/DSBE PARTICIPATION

1. MBE, WBE, DBE and DSBE shall refer to certified businesses so recognized by the City of Philadelphia through its OEO. Only the work or supply effort of firms that are certified as M/W/DSBEs by an OEO approved certifying agency[2] at the time of bid opening will be eligible to receive credit towards the participation ranges. In order to be counted, certified firms must successfully complete and submit to the OEO an application to be included in the OEO Registry which is a list of registered M/W/DSBEs maintained by the OEO and available online at www.phila.gov/oeo/directory.

If bidder or bidder's subcontractor(s) is certified by an approved certifying agency, a copy of that certification should be furnished with the bid.

2. No bidder that seeks to meet the participation range(s) for participation by entering into subcontracts with any M/W/DSBE subcontractor shall be considered to meet the range(s) if the M/W/DSBE subcontractor does not perform a commercially acceptable function ("CAF"). A M/W/DSBE is considered to perform a CAF when it engages in meaningful work or supply effort that provides for a distinct element of the subcontract (as required by the work to be performed in accordance with the Bid), where the distinct element is worthy of the dollar amount of the subcontract and where the M/W/DSBE carries out its responsibilities by actually performing, managing and supervising the work involved; M/W/DSBE subcontractors must perform at least twenty percent (20%) of the cost of the subcontract (not including the cost of materials, equipment or supplies incident to the performance of the subcontract) with their own employees. The OEO may evaluate the amount of work subcontracted, industry practices and any other relevant factors in determining whether the M/W/DSBE is performing a CAF. If it is determined during the review of your Solicitation and Commitment Form that the work described on the Form does not constitute a CAF, your bid may be rejected. For example, a Bidder using an M/W/DSBE non-stocking supplier (i.e., a firm that does not manufacture or warehouse the materials or equipment of the general character described by the Bid specifications and required under the contract) to furnish equipment or materials will only receive credit towards the participation ranges for the fees or commissions charged, not the entire value of the equipment or materials furnished.

3. In order to maximize opportunities for as many businesses as possible, a firm that is certified in two or more categories (e.g. MBE and WBE and DSBE or WBE and DSBE) will only be credited toward one participation range as either an MBE or WBE or DSBE. The firm will not be credited toward more than one category. Bidders will note with their submission which category, MBE or WBE or DSBE, is submitted for credit.

4. An MBE/WBE/DSBE submitting as the prime bidder is required, like all other bidders, to submit a bid that is responsive to the Policy and will only receive credit toward the relevant participation ranges (e.g., MBE range or WBE range or DSBE range) for the amount of its own work or supply effort on this Bid. In addition, the participation of an M/W/DSBE partner, as part of a joint venture created for this bid, may be credited

[2] A list of "OEO approved certifying agencies" can be found at www.phila.gov/oeo

towards the participation ranges only to the extent of the M/W/DSBE partner's ownership interest in the joint venture in accordance with the following criteria:

- The MBE, WBE or DSBE partner(s) must be identified in the OEO Registry prior to contract award;
- The M/W/DSBE partner(s) must derive substantial benefit from the arrangement;
- The M/W/DSBE partner(s) must be substantially involved in all phases of the contract including planning, staffing and daily management;
- The business arrangement must be customary (i.e., each partner shares in the risk and profits of the joint venture commensurate with their ownership interest, contributes working capital and other resources, etc).

5. In listing participation commitments on the Solicitation for Participation and Commitment Form, bidders are required to list a detailed description of the work or supply effort, the dollar amount of the quotation, and percentage of the contract the participation represents. In calculating the percentage amount, bidders may apply the standard mathematical rules in rounding off numbers. The OEO reserves the right to request clarifying information in the event of an inconsistency or ambiguity in the Solicitation For Participation and Commitment Form.

B. RESPONSIVENESS

1. A Bid responsive to the Policy is one which contains documentary evidence of the M/W/DSBEs that have been solicited and that will be used by the Bidder on the contract, if awarded; where the Bid satisfies the M/W/DSBE participation ranges for that contract, the Bidder is rebuttably presumed not to have discriminated in its selection of contract participants.

2. Bidders must submit documentary evidence of MBEs, WBEs and DSBEs who have been solicited and with whom commitments have been made in response to the participation ranges included in this Bid. Failure to submit the Solicitation For Participation and Commitment Form will result in the rejection of the Bid as nonresponsive, although the City, at its sole discretion, may allow Bidders to submit or amend the Solicitation For Participation and Commitment Form at any time prior to award. The Solicitation For Participation and Commitment Form must contain the following information:

- Documentation of all solicitations (regardless of whether commitments resulted therefrom) as well as all commitments made on the enclosed document entitled "Solicitation For Participation and Commitment Form". Bidders should only make actual solicitations of M/W/DSBEs whose work or materials are within the scope of this Bid. Mass mailing of a general nature to M/W/DSBEs or similar methods will not be deemed solicitation, but rather will be treated as informational notification only. A reasonable period of time should be given to all solicited firms to ensure that they have sufficient time to adequately prepare their quotes/subproposals. The bidder's listing of a commitment with an M/W/DSBE constitutes a representation that the Bidder has made a legally binding commitment to contract with such firm, upon receipt of a contract award from the City.

• If the Bidder has entered into a joint venture with an MBE, WBE and/or DSBE partner, the bidder is also required to submit along with the Solicitation For Participation and Commitment Form, a document entitled "Joint Venture Eligibility Information Form," available at OEO, for the City's review and approval of the joint venture arrangement.

3. If Bidder does not fully meet each of the range(s) for participation established for this Bid, Bidder must explain what efforts the bidder made to achieve the M/W/DSBE participation ranges. Bidder must demonstrate, through the submission of documentary evidence, that it took all necessary steps and made reasonable efforts to achieve the M/W/DSBE participation ranges, even if these efforts were not fully successful. OEO will evaluate the scope, intensity and appropriateness of these efforts to ascertain whether they could reasonably be expected to achieve M/W/DSBE participation commensurate with the ranges. Failure to submit the documentary evidence will result in rejection of the bid as nonresponsive, although the City, at its sole discretion, may allow bidders to submit or amend their evidentiary submission at any time prior to award. The submission shall contain and discuss, at a minimum, the following:

• Provide reasons for not committing with any M/W/DSBEs that submitted a quote/subproposal, regardless of whether the quote/subproposal was solicited by Bidder.

• Provide list of all certifying directories used to solicit participation for this Bid.

• Provide any additional evidence pertinent to Bidder's conduct relating to this Bid including sufficient evidence which demonstrates to the OEO that Bidder has not engaged in discriminatory practices in the solicitation of and commitment with contract participants. In describing Bidder's efforts to achieve participation within the ranges, Bidder may submit any corroborating documentation (e.g., copies of advertisements for participation).

The bidder's documentary evidence will be reviewed by the OEO to ascertain whether discrimination has occurred in the solicitation or selection of contract participants. The review will include consideration of the following:

• Whether the bidder's actions were motivated by considerations of race or gender or disability. The OEO may investigate the bidder's contracting activities and business practices on similar public and private sector contracts. For example, if bidder rejects any M/W/DSBE based on price, bidder must fully document its reasons for the rejection and also demonstrate that bidder subjects non-M/W/DSBEs to the same pricing standards. OEO will investigate whether there was any attempt at good faith negotiation of price.

• Whether M/W/DSBEs were treated equally as other businesses in the solicitation and commitment process. For example, the OEO will investigate whether M/W/DSBEs are given the same information, access to the plans and requirements of the contract

and given adequate amount of time to prepare a quote/subcontract as others who were solicited by bidder. The OEO will also investigate whether M/W/DSBEs were accorded the same level of outreach as non-M/W/DSBEs, for example whether bidder short listed M/W/DSBEs for participation or solicited M/W/DSBEs at any pre-bid meetings.

• Whether the bidder's contracting decisions were based upon policies which disparately affect M/W/DSBEs. OEO will ascertain whether bidder selected portions of work or material needs consistent with the capacity of available M/W/DSBE subcontractors and suppliers. OEO will consider whether bidder employed policies which facilitate the participation of M/W/DSBEs on City contracts such as segmentation of the contract or prompt payment practices.

4. After review of the bidder's submission and other information the OEO deems relevant to its evaluation, the OEO will make a written determination that will be forwarded to the awarding City Department.

▪ If the bid is determined nonresponsive by the OEO, the applicant will be notified and may file a written appeal with the OEO within forty-eight (48) hours of the date of notification. The decision of the OEO may be appealed in writing within forty-eight (48) hours of the date of the OEO's decision to the Chief Operating Officer of the Commerce Department or his/her designee whose decision shall be final.

C. RESPONSIBILITY

1. Upon award, the completed Solicitation For Participation and Commitment Form and accompanying documents regarding solicitation and commitments with MBEs, WBEs and DSBEs become part of the contract. M/W/DSBE percentage commitments are to be maintained throughout the term of the contract and shall apply to the total contract value (including amendments). Any change in commitment, including but not limited to substitutions for the listed firm(s), changes or reductions in the work and/or listed dollar/percentage amounts, must be pre-approved in writing by the OEO.

2. The Successful Bidder shall, within five (5) business days after receipt of a payment from the City for work performed under the contract, deliver to its M/W/DSBE subcontractors the proportionate share of such payment for work performed (including the supply of materials) by its M/W/DSBE subcontractors. In connection with payment of its M/W/DSBE subcontractors, the Successful Bidder agrees to fully comply with the City's payment reporting process which may include the use of electronic payment verification systems.

3. No privity of contract exists between the City and any M/W/DSBE subcontractor identified in any contract resulting from this Bid. The City does not intend to give or confer upon any such M/W/DSBE subcontractor(s) any legal rights or remedies in connection with the subcontracted services under Executive Orders 2-05 and 14-08 or by reason of any contract resulting from the Bid except such rights or remedies that the

M/W/DSBE subcontractor may seek as a private cause of action under any legally binding contract to which it may be a party.

4. If the OEO determines that the bidder has discriminated against a M/W/DSBE at any time during the term of the contract, the OEO may recommend to the Procurement Commissioner the imposition of sanctions on the Bidder including debarment of the bidder from submitting and/or participating in future City contracts for a period of up to three (3) years.

D. ACCESS TO INFORMATION

1. The OEO shall have the right to make site visits to the Bidder's place of business and/or job site and obtain documents, such as quotations, and information from any Bidder, subcontractor, supplier, manufacturer or contract participant that may be required in order to ascertain a Bidder's responsiveness and responsibility.

2. Failure to cooperate with the OEO in its review may result in a recommendation to terminate the contract.

E. RECORDS AND REPORTS

1. The Successful Bidder shall maintain all books and records relating to its M/W/DSBE commitments (e.g. copies of quotations, subcontracts, joint venture agreement, correspondence, cancelled checks, invoices, telephone logs) for a period of at least three (3) years following acceptance of final payment. These records shall be made available for inspection by the OEO and/or other appropriate City officials. The Successful Bidder agrees to submit reports and other documentation to the OEO as deemed necessary by the OEO to ascertain the successful bidder's fulfillment of its M/W/DSBE commitments.

F. REMEDIES

1. The Successful Bidder's compliance with the requirements of Executive Orders 2-05 and 14-08, including the fulfillment of any M/W/DSBE commitments, is material to the contract. Any failure to comply with these requirements constitutes a substantial breach of the contract. It is further understood and agreed that in the event the City determines that the Successful Bidder hereunder has failed to comply with these requirements the City may, in addition to any other rights and remedies the City may have under the contract, any bond filed in connection therewith or at law or in equity, exercise one or more of the following remedies, as deemed applicable, which shall be deemed cumulative and concurrent:

a. Withhold payment(s) or any part thereof until corrective action is taken.

b. Terminate the contract, in whole or in part.

c. Suspend/Debar the Successful Bidder from proposing/bidding and/or participating in any future City contracts for a period of up to three (3) years.

d. Recover as liquidated damages, one percent of the total dollar amount of the contract for each one percent (or fraction thereof) of the commitment

shortfall. (NOTE: The “total dollar amount of the contract’’ shall include approved change orders, amendments and for requirements contracts shall be based on actual quantities ordered by the City. For Concessions, the “total dollar amount of the contract” shall mean the Concession Fee paid to the City.)

The remedies enumerated above are for the sole benefit of the City and City’s failure to enforce any provision or the City’s indulgence of any non-compliance with any provision hereunder, shall not operate as a waiver of any of the City’s rights in connection with any contract resulting from this Bid nor shall it give rise to actions by any third parties including identified M/W/DSBE subcontractors.

ANTIDISCRIMINATION POLICY SOLICITATION FOR PARTICIPATION AND COMMITMENT FORM

Minority (MBE), Woman (WBE), Disabled (DSBE) and Disadvantaged (DBE) Business Enterprises [1]

DEPARTMENT OF COMMERCE

OFFICE OF ECONOMIC OPPORTUNITY (OEO)

Bid Number or Proposal Title:	*Name of Bidder/Proposer:*	*Bid/RFP Opening Date:*

List below ALL MBE/WBE/DBE/DSBEs that were solicited regardless of whether a commitment resulted therefrom. - Photocopy this form as necessary.

☐ MBE ☐ WBE ☐ DSBE ☐ M-DBE ☐ W-DBE	Work or Supply Effort to be Performed	Date Solicited		Commitment Made		Give Reason(s) If No Commitment
Company Name		By Phone	By Mail	Yes (*If Yes, give date*)	NO	
Address						
Contact Person		Quote Received		Amount Committed To		
Telephone Number / Fax Number		YES[2]	NO	Dollar Amount $		
Email Address				Percent of Total Bid/RFP %		
OEO REGISTRY # / CERTIFYING AGENCY						

☐ MBE ☐ WBE ☐ DSBE ☐ M-DBE ☐ W-DBE	Work or Supply Effort to be Performed	Date Solicited		Commitment Made		Give Reason(s) If No Commitment
Company Name		By Phone	By Mail	Yes (*If Yes, give date*)	NO	
Address						
Contact Person		Quote Received		Amount Committed To		
Telephone Number / Fax Number		YES[2]	NO	Dollar Amount $		
Email Address				Percent of Total Bid/RFP %		
OEO REGISTRY # / CERTIFYING AGENCY						

☐ MBE ☐ WBE ☐ DSBE ☐ M-DBE ☐ W-DBE	Work or Supply Effort to be Performed	Date Solicited		Commitment Made		Give Reason(s) If No Commitment
Company Name		By Phone	By Mail	Yes (*If Yes, give date*)	NO	
Address						
Contact Person		Quote Received		Amount Committed To		
Telephone Number / Fax Number		YES[2]	NO	Dollar Amount $		
Email Address				Percent of Total Bid/RFP %		
OEO REGISTRY # / CERTIFYING AGENCY						

1. If Bidder/Proposer makes solicitation(s) and commitment(s) with a DBE, Bidder/Proposer shall indicate which class type, M-DBE or W-DBE, is submitted for credit.
2. Attach all quotations to this form.

SECTION 1: GENERAL BID SUBMISSION

1.1 TITLE: **Square Post System**

1.2 CONTRACT TERM: Date of Award to twelve(12) months("Initial Term"), with an option to renew for up to three (3) additional one (1) year periods, ("the Renewal Term") exercisable, at the City's sole discretion, as of the expiration of the Initial Term or the current Renewal term. The City may, at its sole discretion, renew the contract for up to three (3) months at the beginning of each renewal period(s) (the "Additional Performance Period"), if a decision has been made not to renew the contract for an entire year.

1.2.1 The City shall exercise such sole option to renew the Contract Term by issuing a letter (the "Renewal Notice") notifying the Contractor that the Contract is renewed for the Additional Performance Period (identified by commencement and expiration dates) that is specified in the Renewal Notice. The Contract shall be deemed to be renewed for such Additional Performance Period, and Contractor shall be obligated to perform all terms and conditions of the Contract throughout such Additional Performance Period, as of the effective date indicated on the City's Renewal Notice is issued, whether or not Contractor has agreed, verbally or in writing, to such renewal of the Contract term.

1.2.2 If an individual Performance Bond and/or Payment Bond is required under this Invitation and Bid, such bond(s) shall be and remain in full force and effect throughout the Initial Term, any Additional Performance Period, and the period of any unexpired warranty provided or required under the Contract, without notice of Contract renewal by the City to the surety or the consent of the surety thereto. It is the sole responsibility of the Contractor to ensure that such bond(s) remain in full force and effect as provided in this Section 1.2.2, and failure to do so shall be an event of default pursuant to Section 19, Default, of the attached Terms and Conditions of Bidding and Contract.

If participation in the City's Master Performance Security Program is required under this Invitation and Bid, Contractor shall not be required to pay any additional fees upon the issuance of the renewal notice and/or contract amendment for an Additional Performance Period.

1.3 CONTRACT TYPE: **REQUIREMENTS**

1.3.1 The following items are required in the operation of various City agencies as ordered. Exact quantities cannot now be determined but estimates thereof are listed herein. Quantities listed may be increased or decreased to meet the requirements of the City during the period of this contract. A minimum is not guaranteed. Purchase orders issued as a result of this bid will be for materials or services to be delivered generally on an as-needed basis. Successful bidders are cautioned not to deliver any materials or services without first being advised to do so by the ordering agency.

1.3.2 It is the intent of the Procurement Department to make an award for the period as stated above subject to the appropriation of funds in succeeding fiscal year/years by City Council. The City's fiscal year is from July 1st to June 30th inclusive.

Commodities or services on the bid to be ordered after the end of the fiscal year are subject to the issuance of purchase orders for the following fiscal years. The City is not liable for the award involving following fiscal years' funds until such orders are issued.

The successful bidder(s) obligation to deliver on such purchase orders shall not take effect until the orders are issued. To simplify the contract procedure, however, the successful vendor will be required to furnish a Performance Bond or Performance Security Fee to cover units awarded to him.

1.4 METHODOLOGY OF ACQUISITION: Purchase only.

1.5 STATEMENT OF DIRECTION:

1.5.1 It is the intent of the City of Philadelphia to make an award for Square Post system for the Street Department as specified herein during the contract period.

1.6 BID SECURITY

1.6.1 Bid security shall be based upon **cumulative bid amount per Section 5.**

All bids submitted with a total greater than $30,000.00 must be accompanied by the proper Bid Security.

Bidders already enrolled in the City's Master Bid Security Program (July 1, 2012 to June 30, 2014) are not required to provide Bid Security if their bid total is $500,000.00 or less (per paragraph 2 of "Terms and Conditions of Bidding and Contract").

The Master Bid Security Program allows bidders to qualify for bid security for individual bids submitted during the covered bidding period provided the individual bid total is $500,000.00 or less.

1.6.2 **Bids Opening July 1, 2012 through June 30, 2014**
Bidders may qualify for the Master Bid Security Program described above for **July 1, 2012 – June 30, 2014** by submitting a check in the amount of **$200.00** made payable to the City of Philadelphia. The check should be submitted, under separate cover, to the Bid Unit Supervisor at least one day prior to the first bid that the bidder wants covered under the program and is *non-refundable.* Or if, and only if, the bidder chooses to submit the check for the Master Bid Security Program with their bid, the check **MUST** be in the form of a Certified, Treasurer's or Cashier's Check, Bank or United States Postal Money Order and is non-refundable.

1.6.3 If the bidder is not enrolled and does not intend to enroll; or if the total value of the bid submitted exceeds $500,000.00, the Master Bid Security Program is not applicable. Bidders instead MUST submit with their bid a refundable Certified, Treasurer's or Cashier's Check, Bank Money Order or United States Postal Money Order in the amount as specified in Paragraph 2 entitled "Bid Security", of the "Terms and Conditions of Bidding and Contract".

1.7 BID INFORMATION:

1.7.1 All information concerning this bid will be contained in this bid document as issued or amended.

1.7.2 Information provided verbally by any City official shall not be binding or relevant.

1.8 BID SUBMISSION:

1.8.1 Bid information must be submitted to the City of Philadelphia no later than the time and date for the bid opening.

1.8.2 Advertised sealed bids will be received and read publicly at 10:30 AM in Room #170A, 1st Floor, Municipal Services Building, 1401 JFK Boulevard.

1.8.3 Bid should be complete and include ALL information required as described in the various paragraphs of the bid specifications.

1.8.4 All pricing must be completed on the forms provided; be complete; and be in ink or typed.

1.8.5 The bid must be complete as to required bid signatures and corporate seal, and fully accept the terms and conditions contained in the bid.

1.8.6 In accordance with the City of Philadelphia's Regulations Relating to Local Bidding Preferences for Procurement Contracts, this bid may be subject to a 5% local bid preference. In order to determine eligibility to receive the 5% preference, if applicable, bidder or subcontractor **must be certified at the time of the bid opening and must submit with the bid, the Local Business Entity Certification number** as issued by the Procurement Department for the prime contractor or the applicable subcontractor. If the prime relies upon its subcontractor's LBE status in order to be eligible for the preference, the name and certification number of the subcontractor **must** be submitted with the bid. **Failure to submit the prime's LBE certification number or the subcontractor's name and LBE certification number with the bid will deem bidder ineligible for the 5% preference.**

Further, by submission of this bid, bidder makes the following certification in connection with the grant of any local bidding preference:

"I certify, that if awarded this contract on the basis of application of the LBE preference, my company or my subcontractor, throughout the entirety of this contract, will perform the majority of the work under this contract within the geographic limits of the City of Philadelphia, and I will, or cause my subcontractor to, maintain within the City a majority of the inventory or equipment that will be used on this contract or the amount of inventory that is customary for this industry."

Prime or subcontractor's LBE Certification Number_____

If applicable:
Subcontractor's Name_____

NOTE: If you wish to apply for Local Business Entity (LBE) certification, go to www.phila.gov/bids. Please allow sufficient time prior to bidding for processing of the LBE application.

1.8.7 **BID PROCESSING FEE:**
All bids submitted where the bid total is greater than $30,000 must be accompanied by the proper Bid Processing Fee. The fee shall be in the form of a separate check or money order in accordance with Paragraph 3 of the "Terms and Conditions of Bidding and Contract".

1.8.8 When M-BE, W-BE or DS-BE ranges are required on Invitation and Bid, bidders are reminded that the submission of a blank "Commerce Department Office of Economic Opportunity (OEO)" Solicitation and Commitment Form" will be deemed non-responsive and ineligible for an award. Bidders are reminded to read carefully and entirely the "Bidder's Guidelines relating to Executive Order 02-05".

1.8.9 CONTACT PERSON:

PRE-AWARD:
Indicate below to whom in your firm questions concerning this Invitation and Bid should be directed:

Name: _____

Address: _____

City/State/ZC: _____

Telephone No. (_____)_____ Ext.:_____

Fax No.(_____)_____

E-mail address_____

Vendor's WEB address_____

POST-AWARD:
Indicate below to whom in your firm questions concerning the Contract resulting from this Invitation and Bid should be directed:

Name: _____

Address: _____

City/State/ZC: _____

Telephone No. (_____)_____ Ext.:_____

Fax No.(_____)_____

E-mail address_____

Vendor's WEB address_____

1.8.10 ALTERNATES SUBMITTED

If an alternate to any item is offered, bidder must follow instructions in Paragraph 4 of "Terms and Conditions of Bidding and Contract". State the brand name and the model number of each alternate offered. Detailed technical information on the alternate should accompany the bid.
Failure to state alternates will obligate bidder to provide material and/or service specified in the bid; see also 1.8.10 below.

Any other product information submitted by bidder in connection with this bid is for purposes of product description, information and specification only. Bidder agrees that any additional terms or conditions contained therein, including, but not limited to, disclaimers or limitations of liability, do not become part of the bid.

1.8.11 BID QUESTIONS OR PROBLEMS

In preparing the bid response, should any bidder need clarification on the bid requirements, identify a discrepancy in the specifications, determine that a specified product has been discontinued or an alternate procedure is advised, etc.; then the bidder is **STRONGLY** encouraged to bring these issues to the attention of the Procurement Department prior to the bid opening by calling (215) 686-4720 or 4721, or by addressing a letter or fax (fax # 215-686-4727) to the Buyer. Questions, whether written, phoned or faxed should be received no later than seven (7) calendar days prior to the scheduled opening date of the bid. The City reserves the right to only respond to those questions submitted prior to the stated deadline.

If it is in the City's best interest to do so, the bid **MAY** be amended to reflect the proposed changes/modifications. Exceptions taken **DO NOT** obligate the City to change the specifications.

The City of Philadelphia, Procurement Department will notify all bidders in writing, by addendum duly issued, of any interpretations/changes made to specifications or instructions. The City will not accept responsibility for oral instructions, suggestions or changes by any City agency.

1.9 BIDDER QUALIFICATION:

1.9.1 All bidders must be a bona fide manufacturer of, or dealer in, the article or service specified within the bid. To demonstrate this, bidders should submit the following reference information with their bid. References provided should be pertinent to the commodity or service requested in this Invitation and Bid and demonstrates the bidder's ability to perform on a contract of this size and scope.

Please note that reference information in each section must be completed. Failure to submit this information may result in the bidder's disqualification.

SECTION 1:

Customer Reference other than an employee or department of the City of Philadelphia, (excluding suppliers or financial institutions).

Firm Name:	_____	_____	_____
Contact Name:	_____	_____	_____
Phone No.:	_____	_____	_____
Type Work:	_____	_____	_____
Years dealing W/your firm:	_____	_____	_____

SECTION 2:

Previous purchase order(s)/contract(s) with the City of Philadelphia; (State "None" if applicable).

Dept. Name:	_____	_____	_____
Contact Name:	_____	_____	_____
Phone No.:	_____	_____	_____
PO#/Contract#:	_____	_____	_____
Items:	_____	_____	_____

1.10 **SAMPLES:**

If reference is made to Samples in this Invitation and Bid, bidder(s) must furnish said samples to the City of Philadelphia at no additional charge. Samples must be submitted during the listed time frame: ten (10) business days prior to bid opening date through five (5) business days after bid opening date. If vendor fails to meet this requirement, bid may be disqualified and bidder may be ineligible for award. Each individual sample must be labeled with bidders' name and bidding address, contact person, bid number, date of bid opening, manufacturer's brand name and number and item reference number.

Each individual sample must be accompanied by a "SAMPLE SUBMITTAL FORM" attached to this Bid package. One form must be submitted for each sample submitted.

All samples must be submitted to:

City of Philadelphia
Procurement Department
Procurement Buyer
Room 120 Municipal Services Building
1401 - J.F.Kennedy Blvd.
Philadelphia, PA 19102

Samples, if not destroyed, may, upon request, be returned at the bidders' expense. Request for return of samples shall be accompanied by instructions which include shipping authorization and name of carrier and must be received within sixty (60) days after bid opening date. If instructions are not received within this time, the commodities shall be disposed of by the City of Philadelphia.

The City of Philadelphia does not guarantee the condition of returned samples to the vendor due to the various testing required upon the sample(s).

The City will not be responsible for any samples destroyed or mutilated by examination or testing.

The City of Philadelphia reserves the right to inspect the manufacturing process or production facilities of successful and/or prospective bidders or suppliers.

1.10.1 A sample of item listed in Section 2 (2.4.11) and Section 5 (5.1.11) is required for this bid. Reference to the specifications of the item can be found in Attachment 2 of this bid document. Sample should be at least two (2) feet in length for the purpose of testing.

SECTION 2: ITEM REQUIREMENTS AND SPECIFICATIONS

2.1 The successful bidder shall be required to provide the City of Philadelphia's **Streets** Department, **Traffic Engineering Unit** with **SIGN POSTS, SQUARE POST SYSTEM** as specified in Sections 2 and 5 of this Invitation and Bid.

2.2 **Square Post System**

2.2.1 This system consists of a 2" x 2" x 12' Square Post, 14 gauge. Holes punched on 1" centers on four (4) sides. A 2 ¼" x 2 ¼" x 36", 12 gauge galvanized Square Penetrator Anchor Post, punched 4 sides and 5/16" Corner Bolts to connect top post to anchor post.

2.2.2 The posts shall conform to the standard specification for steel sheet, zinc-coated (galvanized) by the Hot-Dip process, ASTM designation A653, Grade 50, Finish conforming to coating designation **G70 (0.70 ounces per square foot)**, and additional chemical treatment for enhanced corrosion resistance. Galvanization must occur after all holes have been punched. The hot-dip process should occur after all holes are formed and all welds have been completed. In the case where a weld must occur after the galvanization the protective coating must be restored using zinc rich paints or similar products capable of building a zinc rich film to the 0.70 ounces per square foot thickness. In all cases welding slag must be removed and any zinc oxide or zinc-rich sublimate caused by burned off zinc must be thoroughly cleaned up before the zinc-rich paint is applied. If sweep blasting is used to clean up the weld site a surface roughness of Sa 2½ is the target.

2.2.3 The shape of the top post shall be square tubing formed of 14 gauge (.083 U.S.S. gauge) steel, carefully formed into size and corner induction welded in such a manner that neither weld nor flash shall interfere with telescoping properties.

2.2.4 An inspector must be allowed access to the plant so he can observe the galvanization process to ensure that it is being carried out properly. Galvanization coatings must be tested to ensure that all square posts are galvanized according to this specification. Magnetic or electronic thickness gauges are to be used to confirm that coating designation G70 has been properly executed.

2.2.5 **Strength and Tolerances:**

Yield Strength Properties: Yield strength is 60,000 psi min.

Tolerances:

1. Nominal Outside dimensions: 2" x 2"
2. Outside Tolerance at all sides at corners +/-.010"

3. Wall Thickness Tolerances +/-.008”
4. Convexity and Concavity: Measured in the center of the flat sides, tolerance in +/- .010”, determined at the corner.
5. Square Tolerance: +/-.012”
6. Permissible Twist in 3 lengths: .062”
7. Straightness Tolerance Permissible variation in straightness is 1/16” in 3 feet.
8. Corner Radii: Standard outside corner radii shall be 5/32 of an inch, +/-1/32 inch.

2.2.6 The length of each post shall have a permissible length tolerance of +/- ¼”.

2.2.7 The hold diameter shall be 7/16” (plus or minus 1/64”) on 1” centers on two opposite sides or on all four sides. Holes shall be on centerline of each side in true alignment and opposite to each other. Tolerance on the hole spacing is plus or minus 1/8” in 20’.

2.3 In Section 5 “Pricing”, bidders are requested to provide the unit price of the listed items at the time of bid opening, in the unit of measure indicated, for the entire period of the contract.

2.3.1 **31677 000 061 00**
2” X 2” X 12’ (14 Gauge) Galvanized Square Posts. (per Para. 2.2)

Estimated quantity - 1000 EA

2.3.2 **31677 000 064 00**
2” X 2” X 14’ (14 Gauge) Galvanized Square Posts. (per Para. 2.2)

Estimated quantity - 100 EA

2.3.3 **31677 000 041**
2-1/4" X 2-1/4" X 36", 12 gauge Sign Posts, Square, Penetrator Anchor Post, (per Para 2.2)

Estimated quantity – 1000 EA

2.3.4 **31677 000 042**
Corner Bolt, size: 5/16" X 2", steel plated, FOR 2-1/2" tube.

Estimated quantity – 3000 EA

2.3.5 **31677 000 047**
Rivets, 3/8" drive for use with 2-1/4" Square Anchor Post

Estimated quantity - 1,000 EA

2.3.6 **31677 000 048**
Caps, Drive, Manual for 2 ¼" square anchor post

Estimated quantity – 25 EA

2.3.7 **31677 000 049**
Drive Caps, Power, for 2 ¼" Square Anchor Post

Estimated quantity – 25 EA

2.3.8 **31677 000 060**
Drive Shank, Power, 1 1/8" x 6" for 2 ¼" Square Anchor Post

Estimated quantity – 10 EA

2.3.9 **31677 000 065**
U-Jack Manual Post Puller; including engagement pin; hardened steel, one piece, machine cut 3/4 inch steel head handle tube of 4130 steel, one piece. Formed and reinforced base machined fit links and hardware, bright yellow painted finished

Estimated quantity – 1 EA

2.3.10 **31677 000 066**
U-Jack Replacement Engagement Pin

Estimated quantity – 12 EA

2.3.11 **31677 000 080**
Base, surface mount for 2" Square Post Part w/installation hardware (UM-SMBL Attachment I).

Estimated quantity – 100 EA

2.4 **WARRANTY**

Bidders are requested to quote on component parts in inventory or in production at the time of bid opening. Parts must be new and guaranteed to be free from all defects for a minimum of **NINETY (90) DAYS** from the date the part is put into service by the City. In the event the part is defective or fails within the stated warranty period, the vendor will make all necessary adjustments at no additional cost to the City.

2.5 **Delivery LOCATION**
Traffic Signal & Sign Shop
4501 "G" Street
Philadelphia, PA 19120

DELIVERY:
BIDDER TO COMPLETE SECTION 5, "TYPE OF TRANSPORT."

2.6 Vendor to submit sample for item in Section 5 (5.1.11), per paragraph 1.10.1.

SECTION 3: BID EVALUATION AND AWARD

3.1 EVALUATION

3.1.1 Bid will be evaluated by the Procurement Department.

3.1.2 Bids will be evaluated for responsiveness to the bid specifications and for responsibility of the bidders.

3.1.3 Bids which are determined to be non-responsive for reasons of:

(i) improper bid security
(ii) improper bid execution
(iii) incompleteness
(iv) offering counter terms and conditions
(v) improper or incomplete execution of OEO documents (if applicable)

may be disqualified by the City without notice to the bidder. The decision of the City is final.

3.1.4 Bidders whose bids are determined to be non-responsible for reasons of bidder qualification shall be notified by the City of the reasons for the determination and may contest the finding of non-responsibility through the prescribed procedures described in paragraph 9 of "Terms and Conditions of Bidding and Contract".

3.2 AWARD

3.2.1 This Invitation and Bid shall be awarded as a whole to the lowest responsive and responsible bidder. Bidder must bid all items to be eligible for award.

3.2.2 If the 5% local bid preference is applicable, the total bid price or total section price of the certified Local Business Entity (LBE) will be multiplied by .95 and rounded to the second decimal place. The adjusted bid price of the LBE will then be used in determining the lowest responsive and responsible bidder.

Unless the Procurement Commissioner determines not to grant a preference for the reasons stated in subsection b., of the LBE Regulation, an LBE, whose bid is otherwise responsive and responsible and who has submitted the information required above, shall be granted a five percent bid preference on competitive bid(s) awards that are over $30,000.00 and awarded as a whole or by section.

3.2.3 Performance Security

If the total award amount is $500,000 or less, bidders attention is directed to paragraph 14 of "Terms and Conditions of Bidding and Contract", for the required Performance Security.

Please note however, that all awards as a result of this bid will have a minimum contract amount of $30,001.00. All awards at the $30,001.00 amount will be subject to a $50.00 Master Performance Security Fee.

3.2.4 **City of Philadelphia-Business Corporate and Slavery Era Insurance Disclosure**

In accordance with Section 17-104 of The Philadelphia Code, the Bidder, after execution of this Contract, will complete an affidavit certifying and representing that the Bidder (including any parent company, subsidiary, exclusive distributor or company affiliated with Bidder) has searched any and all records of the Bidder or any predecessor business entity regarding records of investments or profits from slavery or slaveholder insurance policies during the slavery era. The names of any slaves or slaveholders described in those records must be disclosed in the affidavit.

The Bidder expressly understands and agrees that any false certification or representation in connection with this Paragraph and/or any failure to comply with the provisions of this Paragraph shall constitute a substantial breach of this Contract entitling the City to all rights and remedies provided in this Contract or otherwise available in law (including, but not limited to, Section 17-104 of the Philadelphia Code) or equity and the contract will be deemed voidable. In addition, it is understood that false certification or representation is subject to prosecution under Title 18 Pa.C.S.A. Section 4904.

3.2.5 Insurance

Insurance is a requirement for this bid in accordance with Paragraph 15 of the "Terms and Conditions of Bidding and Contract". No contract will be executed nor purchase order issued unless and until all required insurance certificates, in the required amount, are received. **All insurance MUST meet the following requirements:**

- Insured must be in the same name and address as the Bidder
- The insurance carrier must be rated "A" or better by AM Best
- The certificate holder must be the City of Philadelphia, and specifically named as an additional insured on the certificate in the "Description of Operations section."
- Certificate must be signed by an authorized representative of the insurance company/carrier

All certificates are to be sent to the Office of Risk Management, One Parkway, 1515 Arch Street, 14th Floor, Philadelphia, PA 19102, Attn. Debbie Lawton or FAX to (215) 683-1705.

3.2.6 A Pre-Award meeting will be scheduled with the vendor recommended for the award to discuss the intention and expectation of the contract and the supplies associated with it.

SECTION 4: CONTRACT MANAGEMENT

4.1 CITY OF PHILADELPHIA RESPONSIBILITY

4.1.1 Order Against Contracts

Subsequent to contract conformance of a Requirements bid, purchase Order needed. Such purchase orders will show if delivery is to be made upon receipt of order, or only after notification by the using department.

4.1.2 Invoices shall be submitted after delivery and acceptance of the Product or service by the City. The City attempts to process invoices in a timely manner. Delays can occur because of incomplete or inaccurate invoicing information. Please make sure that invoices contain the information as specified in Section 4.2.8. This is necessary to process payments to the Contractor as quickly as possible. Invoices which are not in accordance with the instructions in section 4.2.8 will be rejected for correction.

4.1.3 The using agencies and departments are responsible for monitoring the services and/or products delivered as described in the contract. If any problems arise, a letter should be sent to the vendor requesting resolution by a specified date. A copy should be sent to the buyer.

If vendor does not resolve the breach of contract by the requested date the matter should be turned over to the buyer.

4.1.4 **ADD-ONS:**
The City reserves the right to add, delete and/or acquire products/services that the vendor can supply that are similar to, but not specifically called for in this bid. The procedure for such acquisitions shall be as follows:

Procurement or the using department will obtain from the Vendor a letter (on his/her letterhead) verifying the items to be added. The letter shall include the complete description of the item, the location (if applicable), the bid number bid schedule number, the price to the City and the applicable contract period; and upon receipt and approval by the Procurement Department shall automatically become part of the contract. **The City, however, reserves the right to accept or reject the letter and to acquire the supplies or materials in the open market.**

4.2 VENDOR RESPONSIBILITY

4.2.1 Contractor may deliver only products as authorized in the contract and only after receipt of a purchase order or other authorized document from the Procurement Department. All orders must be in writing. Contractor shall not accept verbal delivery requests until after receipt of purchase order or other authorizing document from Procurement.

4.2.2 Contractor may deliver only products at the prices quoted in the contract and that are reflected on a purchase order or a change to a purchase order (a change to a purchase order is issued whenever the items, unit price, total amount, or terms and conditions change from the original purchase order).

4.2.3 Contractors may deliver products up to the dollar limit of the purchase order and for the period shown on the purchase order. Contractors are requested to carefully monitor obligations against purchase orders and inform the departments of anticipated funding shortfalls.

4.2.4 DELIVERY:

Unless otherwise specified in Section 2, noted by bidder in Section 5, and/or approved by the Using Agency, delivery of product and/or service will be made within 30 days from date requested by Using Agency. VENDOR NOTE: In Section 5, specify delivery if other than 30 days.

4.2.4.1 Liquidated Damages

Liquidated Damages in the amount of 5% of the unit price may be applied to each item which exceeds the delivery schedule/requirement.

4.2.5 In the event that the contractor receives an order for products, services or equipment not specifically priced and incorporated into the contract, they must:

(i) bring this to the immediate attention of the Procurement Dept., and
(ii) notify the ordering agency in writing and refuse to deliver.

4.2.6 Should products, services, or equipment be delivered that are not specifically incorporated and priced into the contract, and/or be delivered without purchase order, the City shall have no obligation for payment.

4.2.7 For delivery of products, contractors shall honor and be paid for orders placed until the close of business of the date of purchase order expiration. Delivery of product may occur following purchase order expiration, so long as the order was placed prior to the purchase order expiration date.

4.2.8 Invoices/Receipts

4.2.8.1 Successful bidder(s) agrees not to invoice more than once per month per purchase order.

4.2.8.2 Invoices should be sent in triplicate to each ordering department: One (1) original and two (2) copies of fully itemized invoices. Failure to submit invoices in the form noted below will cause a delay in payment.

(a) After the delivery or services have been completed the Contractor must submit three (3) copies of the invoice for payment to the receiving department listed on the purchase order.
(b) The invoice must correctly reference the purchase order number, the vendor name, address and Federal Employer Identification number.
(c) Checks will only be made payable to the company name as shown on the purchase order; the invoice must reflect this same company name as the "pay to".
(d) The invoice must show the quantity and type of item or service and the price.
(e) The unit of purchase on the invoice must agree with the unit cited on the purchase order. Reference to the specific line item is helpful.

4.3 **PRICE INCREASE OR DECREASE:**

Contractor shall provide Products at the prices set forth in Section 5 for period of twelve (12) months; thereafter, service may be renewed under the terms and conditions of this agreement at the sole option of the City on an annual basis for additional one (1) year period(s). Contractor may increase prices for the optional renewal period(s) provided that; notice of price increases must be received, in writing, by the City at least 60 days prior to the expiration of each contract period and price increase letter shall be sent to the Buyer, Room 120 Municipal Services Building, 1401 JFK Blvd., Phila., PA 19102, referencing the Bid #, Contract #, period and showing item(s), descriptions and applicable pricing.

In no event shall the increased prices exceed contractor's published charges for non-educational state and local governments on the effective date of the adjustment, under similar terms and conditions.

Failure to notify the City within this sixty (60) day time frame shall result in the following:

the effective date of the price increase shall be sixty (60) days from the receipt of the price increase letter by the City;

or

if the letter is not received before the last day of the contract period, the prices for the renewal period shall be the same as the prices for the previous contract period.

NOTE: Price decreases may be forwarded to the Procurement Department buyer, in writing at any time during the contract period, to include any renewal period(s).

Failure to notify the City within the time frame specified in 4.3 will result in a commensurate delay in implementing the price change.

4.4 **VENDOR ACCEPTANCES – IN SUBMITTING AN EXECUTED BID, THE BIDDER AGREES TO THE CONTRACT MANAGEMENT PROCEDURES IN THIS SECTION.**

SECTION 5: PRICING

(PRICES QUOTED MAY NOT EXCEED THREE (3) DECIMAL PLACES)

Unit pricing quoted below will prevail in case of any discrepancy (ies) between unit price and the extended amount and will be the determining factor in establishing applicable contract amount(s)/award.

		QTY	UNIT	UNIT PRICE	AMOUNT
5.1 Description					
5.1.1	**31677 000 061 00** 2" x 2" x 12" (14 Gauge)Galvanized Square Posts (Per Para. 2.2)	1000	EA	$_____	$_____
5.1.2	**31677 000 041** 2 ¼" x 2 ¼" x 36" (12 Gauge)Galvanized Square Penetrator Anchor (Per Para. 2.2)	1000	EA	$_____	$_____
5.1.3	**31677 000 042** 5/16" x 3" Corner Bolt, Steel Plated for 2 ½" tube	3000	EA	$_____	$_____
5.1.4	**31677 000 047** Rivets; 3/8" Drive for use with 2 ¼" Square Anchor Post	1000	EA	$_____	$_____
5.1.5	**31677 000 048** Caps, Drive, Manual for 2 ¼ Square Anchor Post	25	EA	$_____	$_____

		QTY	UNIT	UNIT PRICE	AMOUNT
5.1.6	**31677 000 049** Drive caps, power for 2 ¼" Square Anchor Post	25	EA	$_____	$_____
5.1.7	**31677 000 060** Drive Shank, power, 1 1/8" x 6" For 2 ¼" Square Anchor Post	10	EA	$_____	$_____
5.1.8	**31677 000 065** U Jack Manual Post Puller (Per Para. 2.4.9)	1	EA	$_____	$_____
5.1.9	**31677 000 066** U Jack replacement Equipment Pin	12	EA	$_____	$_____
5.1.10	**31677 000 064 00** Post, square, galvanized sign; 2" x 2" x 14'0" GA; holes all four (4) sides the entire length (Per Para. 2.2)	100	EA	$_____	$_____
5.1.11	**31677 000 080** Base, surface mount for 2" Square Post Part w/installation Hardware (UM-SMBL-Attachment 2)	100	EA	$_____	$_____

Extended Total Bid Amount $_____
(Unit Price X Quantity
for all items bid)

BIDDER TO STATE HOW PRODUCT(S), SUPPLIES AND/OR PARTS ARE TO BE DELIVERED TO THE CITY OF PHILADELPHIA: (E.G. ON-SITE DELIVERY VIA AWARDED VENDOR'S TRUCK, UNITED PARCEL, U.S. POSTAL SERVICE ETC.).

TYPE OF TRANSPORT: _____

BIDDER SPECIFY IF DELIVERY IS OTHER THAN 30 DAYS: _____

Attachment 1

ATTACHMENT 1

SAMPLE SUBMITTAL FORM
To be submitted with samples for
Invitation and Bid: S3YC4880

PROCUREMENT SAMPLE SUBMITTAL	**SUBMIT TO:** Materials Testing Laboratory 1500 E. Hunting Park Avenue Philadelphia, PA 19124 (215) 685-1430
Vendor Name:_____ Address:_____ Phone # :_____ Contact Name:_____	Bid Number:_____ Opening Date: _____
Item Reference No. from Bid (Section5): _____ Manufacturers Brand and Number: _____	
Remarks:	

REQUEST FOR TEST	TO: **MATERIALS ENGINEERING LABORTORY** 1500 E. HUNTING PARK AVENUE. Philadelphia, PA 19124 (215) 685-1430	LAB NO.
SAMPLE NO.	MANUFACTURER	DATE
CONTRACT NO. OR JOB	LOCATION: Procurement Department, Rm. 120 Municipal Service s Bldg. Phila, PA., 19102	
DESCRIPTION OF SAMPLE		
INTENDED USE		
SPECIFICATION		
☐ MATERIALS NOW IN USE	☐ MATERIAL SUBMITTED PRIOR TO USE	
REMARKS		
SUBMITTING DEPT. AND UNIT PROCUREMENT	PHONE NO. (215) 686-4791	ENGINEER OR INSPECTOR (Signature) PRPI

Attachment 2

UM-SMBL SURFACE MOUNT BASE FOR 2" SQUARE POST

ID #	DESCRIPTION	QTY. PER	QTY. TOTAL
1	10" X 10" X 1/4" THICK H/R STEEL PLATE	1	
2	2" X 2" X 1/8" THICK TRIANGULAR STEEL GUSSETS	4	
3	2 1/4" X 2 1/4" X 12 GA. PERFORATED STEEL TUBING @ 6" LONG	1	

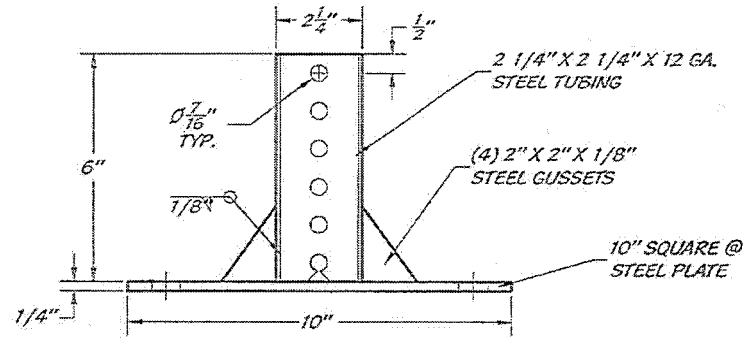

SIDE VIEW

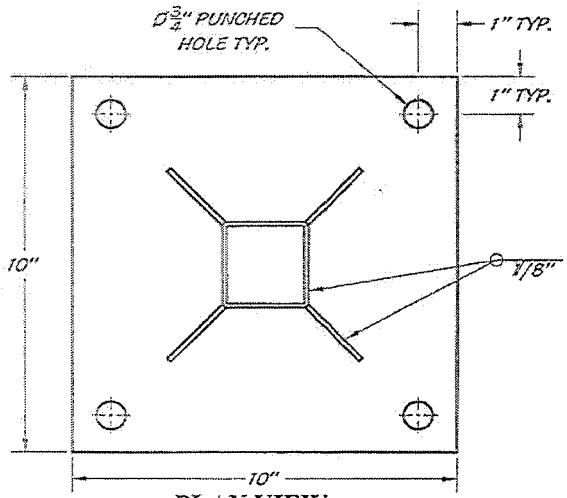

PLAN VIEW

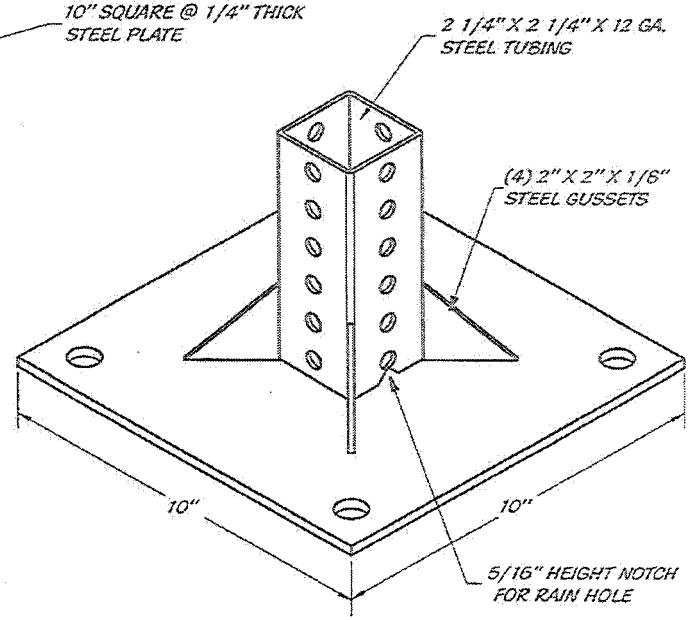

EXPLODED VIEW

DWG BY: L. NGO	CUSTOMER:	DRAWING #: UM-SMBL	PAGE #: 1
DATE: 10-09-02	DESCRIPTION: BASE PLATE FOR 2" SQUARE POSTS		
SCALE: NONE			

REVISION	DESCRIPTION	DATE

31677 000 080

Base, surface mount for 2" Square Post

(para. 2.4.1.1)

Attention Bidder:

This bid document may not contain all of the documents that you will need to complete the bid submission. On occasion, it is not possible to include the following:

Exhibits
Drawings
Attached specifications
Attached documents

If you have not received a corresponding attachment, drawing or exhibit that is referenced in the bid document you may obtain it by contacting the Public Information Unit at 215-686-4720.

C I T Y O F P H I L A D E L P H I A

INSTRUCTIONS FOR GETTING PAID BY THE CITY OF PHILADELPHIA

The City attempts to process invoices in a timely manner. Delays can occur because of incomplete or inaccurate invoicing information. Please make sure that all your invoices contain the following information to help the City in paying you as quickly as possible.

1. **AFTER THE DELIVERY OR SERVICES HAS BEEN COMPLETED YOU MUST SUBMIT THREE (3) COPIES OF AN INVOICE FOR PAYMENT TO THE RECEIVING DEPARTMENT LISTED ON THE PURCHASE ORDER.**

2. **THE INVOICE MUST CORRECTLY REFERENCE THE PURCHASE ORDER NUMBER, THE VENDOR NAME, ADDRESS AND FEDERAL EMPLOYER IDENTIFICATION NUMBER.**

3. **CHECKS WILL ONLY BE MADE PAYABLE TO THE COMPANY NAME AS SHOWN ON THE PURCHASE ORDER, THE INVOICE MUST REFLECT THIS SAME COMPANY NAME AS THE "PAY TO".**

4. **THE INVOICE MUST SHOW THE QUANTITY AND TYPE OF ITEM OR SERVICE AND THE PRICE.**

5. **THE UNIT OF PURCHASE ON THE INVOICE MUST AGREE WITH THE UNIT CITED ON THE PURCHASE ORDER. REFERENCE TO THE SPECIFIC LINE ITEM IS HELPFUL.**

Paying vendors is the responsibility of the *receiving* City Department(s), not the Procurement Department. Vendors should bring any problems concerning payments to the attention of the appropriate City receiving department. The name and number of the contact person can generally be found on the purchase order. If all necessary paperwork has been submitted to the department and questions still remain, vendors should contact:

City of Philadelphia
Accounting Verification
Room 1340 Municipal Services Building
1401 J.F.K. Blvd.
Philadelphia, PA 19102
Te. 215 686 6365

IN YOU ARE INTERESTED IN RECEIVING YOUR PAYMENTS ELECTRONICALLY RATHER THAN BY CHECK PLEASE SEE ATTACHED LETTER & ACH VENDOR ENROLLMENT AND CHANGE FORM.

BIDDERS GUIDELINES*

The following list will assist you in the preparation of your bid.

- Read the entire bid so that you fully understand all the requirements.
- All bids must be submitted to the City no later than the time and date states as the Bid opening.
- Note the City Anti-Discrimination Policy or Economic Opportunity Plan (EOP). If Department of Commerce Office of Economic Opportunity (OEO) Participation is required be sure to fill out all appropriate forms. If you have questions call OEO at (215) 683-2000.
- Make sure you submit the appropriate Bid Security and Bid Submission Fee with your bid. Refer to Section 1 of the bid and the Conditions of Bidding sheet.
- Bidder must meet all qualifications.
- If an alternate to any item is being offered, you must follow the instructions in paragraph 2 of the Conditions of Bidding sheet.
- Does the bid require a site inspection, attendance at a Pre-Bid Meeting, samples, financial information or other data you must provide?
- Have you signed and returned all Addenda?
- If the bid is going to be awarded as a whole, you must bid on all items. See Section 3 of the bid: Bid Evaluation and Award.
- Bidders' attention is directed to the Conditions of Bidding sheet regarding the Master Performance Bond.
- Bids and pricing must be written in ink or typed. Faxed bids will not be accepted.
- Do not submit counter terms or conditions. **Your bid will be rejected**.
- Have you signed the Contract Page and affixed your Corporate Seal as required?
- **Do not** combine check amounts. All checks should be individual and specific.
- Please double check all mathematical calculations for errors.

If you have questions call Public Information at (215) 686-4720.

*This information is provided for guidance only and does not preclude your responsibility to read fully and respond to all portions of the bid.

CITY OF PHILADELPHIA
PROCUREMENT DEPARTMENT
Public Information Unit

This Is Not A Right To Know Request. This form cannot be used to submit a Right To Know Request. *See* City of Philadelphia Open Records Policy: http://www.phila.gov/privacy/pdfs/finalcityopenrecords.pdf

ATTENTION VENDORS

If your company would like to receive the results of a particular bid, the Public Information Unit of the Procurement Department will forward this information to you at a $**10.00 fee, company check or money order only, no personal checks or cash,** for **each** bid number requested. Please be advised that bid tabulations **are not available** by telephone. If you have any questions, Please call 215-686-4755 or 215-686-4756.

BID RESULTS REQUEST FORM

Please complete form below. Only one (1) request per form.

Date of Request:_____

Bid Number Requested: _____ Opening Date: _____

Company Name: _____
Company Representative: _____
Address: _____
_____
Email Address _____
Telephone No.: _____ Fax No.: _____

Mail this Request to the address below and enclose the following items:

- ☐ Company check or Money Order payable to **"City of Philadelphia"**
- ☐ A self-addressed stamped envelope which is at least 9 ½ " x 12 ½ " or larger for each Bid requested.

Failure to send either of the above items, will void your request.

Mail Request To:
The Procurement Department Public Information Unit
Attention: Bid Results
1401 JFK Blvd.
Room 170B
Philadelphia, PA 19102

COMPANY CHECK OR MONEY ORDER ONLY

C I T Y O F P H I L A D E L P H I A

Procurement Department
120 Municipal Services Building
Philadelphia, PA 19102-1685
(215) 686-4720
(215) 686-4716 Fax

Hugh Ortman
Procurement Commissioner

Master Bid Security Program for Service, Supplies and Equipment Bids
Period of Coverage: July 1, 2012 – June 30, 2014

(Bids for Professional Consulting Services, Public Works, Construction and Demolition [wrecking and building removal] *<u>are not</u>* covered under the Master Bid Security Program)

Dear Vendor:

The Philadelphia City Charter requires that each bid submission over $30,000 be accompanied by a certified check in the amount specified in the bid invitation. This requirement can be met for most bids if the Bidder is covered under the City's Master Bid Security Program. This program provides bid security coverage for Service, Supply and Equipment bids that have a total dollar value of over $30,000 up to $500,000.

To file for coverage under the Bid Security Program, for the period **July 1, 2012 to June 30, 2014**, complete the enclosed application and return it with a check for **$200.00.** Make the check payable to "**City of Philadelphia**". It is **non-refundable.** To clarify the precise use of the check, enter the words "**Bid Security Program**" **2012 – 2014** on the face of the check.

If you do not become a participant in the program at this time, you may still submit bids. However, they must be accompanied by a certified check in the amount specified in the Terms and Conditions of Bidding.

For additional information or inquiries regarding this program, please contact: The Public Information Unit at (215) 686-4719, (215) 686-4720 or (215) 686-4721.

IF A RECEIPT IS REQUESTED, PLEASE ENCLOSE A SELF-ADDRESSED STAMPED ENVELOPE.

Forward Check with Application to
CITY OF PHILADELPHIA
MASTER BID SECURITY PROGRAM
170A Municipal Services Building
Philadelphia, PA 19102-1685

Company Name: _____

Fed EIN/SSN: _____

Street Address: _____

City, State, Zip: _____

Contact Person: _____

E Mail Address: _____

Telephone No: (___)_____**Fax No:** (___)_____

☐ A. Check payable to the City of Philadelphia in the amount of $200.00 for 7/1/12 to 6/30/14

DO NOT SEND CASH. NO PERSONAL CHECKS.

Internal Use Only

Rcvd. ___/___/___ Pymt. Type _____ Ck. Amt. $ _____ Ck.# _____

C I T Y O F P H I L A D E L P H I A

Office of the Director of Finance
Room 1330, Municipal Services Bldg.
1401 John F. Kennedy Boulevard
Philadelphia, Pa 19102-1685

Rob Dubow
Director of Finance

The City of Philadelphia is pleased to announce a **Vendor Information Payment System (VIPS)** which will allow businesses such as yours to inquire about the status of invoices billed against purchase orders and professional services contracts. The only requirement is that your invoices utilize a unique number – either alpha, numeric or a combination of the two.

This system will be operational twenty four hours a day, seven days a week. All you have to do is dial **215-686-5968**, and follow the prompts to get an up-to-date status on your payments.

Enclosed for your convenience is an easy to use reference guide which provides a brief overview of what you can expect. I urge you to give it a try and see for yourself how easy it is to use. If you should happen to experience any problems, or if you would like to comment on this system, please call the **Office of the Director of Finance** at **215-686-6167**.

I believe that you will find this way of obtaining payment information convenient and easy to use.

Vendor Information Payment Reference Guide

- 1- Call 215-686-5968.
- 2- After the prompts,enter the 8 numeric characters that uniquely identifies your purchase order.
- 3- Select one of the three inquiry options:
  - a) by your purchase order.
  - b) by your company.
  - c) by your specific invoice number.
    - (Numeric invoice numbers only)

C I T Y O F P H I L A D E L P H I A

PROCUREMENT DEPARTMENT
120 Municipal Services Building
Philadelphia, Pa 19102-1685

Hugh Ortman
Procurement Commissioner

Dear Valued Vendor,

The City of Philadelphia is pleased to announce a new online **Vendor Invoice Information (VII) Website** which will allow businesses such as yours to inquire about the status of invoices billed against purchase orders and professional services contracts. The only requirement is that your invoices utilize a unique number – alpha, numeric or a combination of the two.

This system will be operational twenty four hours a day, seven days a week. All you have to do is log on to the City of Philadelphia website: **www.phila.gov,** click on "Vendor Invoice Information" under the "Help Me" section of the home page, enter your Federal Employer Identification Number (FEIN) and a valid active purchase order. Then, agree to a waiver statement and follow the prompts to get an up-to-date status on your payments.

You are urged to give it a try and see for yourself how easy it is to use. If you should happen to experience any problems, or if you would like to comment on this new system, please e-mail us using the question and comment field provided on the site.

We believe that you will find this new way of obtaining payment information convenient and easy to use.

TERMS AND CONDITIONS OF BIDDING AND CONTRACT

BID SUBMISSION

1. PREPARATION AND SUBMISSION OF BID. All bids must be written in ink **or** typewritten and made on the forms issued and signed in ink by a person with legal authority to bind the bidder. The contract awarded hereunder shall consist of the Invitation and Bid, , all addenda thereto issued by the City, all exhibits and attachments issued and/or accepted by the City and these Terms and Conditions of Bidding and Contract (the "Contract"). It is the sole responsibility of the bidder to ensure that it has received any and all addenda and the Procurement Commissioner may in his/her sole discretion reject any bid for which all addenda have not been executed and returned in accordance with the instructions provided therein. No bid may be considered if received after the date and time for the opening of bids established by the Invitation and Bid, nor may any bid be modified after that date and time. The time of bid opening shall be the time displayed on the City's official bid clock located at the bid room. In the event of any discrepancy between actual time and the City's official bid clock, the latter shall determine the time of bid opening.

2. BID SECURITY. Unless the bidder is enrolled under the City's Annual Master Bid Security Program or an individual bid bond is required in the Invitation and Bid, all bids must be accompanied by a Certified Check, Treasurer's Check, Cashier's Check, Bank Money Order, or United States Postal Money Order made payable to the order of "The City of Philadelphia" in the proper amount as shown below:

AMOUNT OF BID OR ESTIMATED. CONTRACT	AMOUNT OF CERTIFIED CHECK
$ 30,000.00 or less	No Check Required
$ 30,000.01 – $ 99,999.99	$ 500.00
$100,000.00 – $249.999.99	$2,000.00
$250,000.00 – $499,999.99	$4,000.00
$500,000.00 or more	$6,000.00

When computing amount of Bid for Certified Check purposes, do NOT deduct for trade-ins.

Any bid in excess of $500,000 is not covered by the Annual Master Bid Security Program, and bidder must submit a certified check, treasurer's check, cashier's check, bank money order, or United States postal money order made payable to the order of "The City of Philadelphia" in the required amount.

Once the lowest responsive and responsible bidder has been determined all other bidders will receive a refund in the amount of the bid security submitted. Bid security submitted by the lowest responsive and responsible bidder will be refunded after receipt of all duly executed Contract documents, required fees, bonds or other performance security. Funds submitted for the Master Bid Security Program are not refundable.

3. BID PROCESSING FEE. In addition to bid security and any other fee or monies required to be submitted with the bid, the bid shall be accompanied by a non-refundable processing fee in the form of a separate standard check, bank money order or United States postal money order made payable to the order of "City of Philadelphia" in an amount based on the gross amount of the bid in accordance with the formula below. Cash is not acceptable.

AMOUNT OF BID OR ESTIMATED CONTRACT	AMOUNT OF PROCESSING FEE
$ 30,000.00 or less	No Check Required
$ 30,000.01 – $ 100,000.00	$ 10.00
$ 100,000.01 – $ 300,000.00	$ 30.00
$ 300,000.01 – $ 500,000.00	$ 50.00
$ 500,000.01 – $1,000,000.00	$100.00
$1,000,000.01 – $2,000,000.00	$200.00
$2,000,000.01 – $3,000,000.00	$300.00
$3,000,000.01 – $4,000,000.00	$400.00
$4,000,000.01 – $5,000,000.00	$500.00
$5,000,000.01 or more	$600.00

4. SPECIFICATIONS. When a formal, numbered, specification is referred to in the Invitation and Bid, no deviation therefrom will be permitted, except if/as indicated in the Invitation and Bid and the bidder will be required to furnish articles and/or services in conformity with that specification. When catalogues, model numbers, trade names, or cuts are listed in the Invitation and Bid, they are, unless otherwise specified, included for the purposes of furnishing bidders with information concerning the style, type or kind of article and /or service desired. A bidder may offer an article and/or service which he/she certifies to be equal or better in quality, performance and other essential characteristics. If submitting an alternate, the bidder must specify the alternate (e.g., make and model #) in the bid and submit with the bid a complete description of the article (including any technical literature) and/or service proposed to be furnished. Failure to do so will require the bidder to furnish the article and/or service specified in the Invitation and Bid. The Procurement Commissioner reserves the sole right to determine whether alternates offered are equal or better. Unless otherwise provided in the bid specifications, all items offered by the bidder must be new. A "new" item is one which will be used first by the City. This clause shall not be construed to prohibit bidders from offering goods, supplies, equipment, or materials containing recycled materials or printing with recycled content; bidders intending to provide goods made with recycled materials should notify the Procurement Department.

5. PATENTS. The successful bidder shall be solely responsible for all royalties and charges that may be due to any patent holder for or on account of the use of any patented appliance, product or processes. Evidence of such payment shall be submitted upon request of the Procurement Commissioner and failure to submit such evidence may, in the sole discretion of the Procurement Commissioner, result in rejection of the bid or constitute an event of default, entitling the City to all rights and remedies as provided herein in

Section 16 and/or 18.

6. LOCAL BIDDING PREFERENCE
In accordance with Chapter 17-109 of the Philadelphia Code relating to Local Bidding Preferences for Procurement Contracts, this bid may be subject to a 5% local bid preference. In order to determine eligibility to receive the 5% preference, if applicable, bidder or subcontractor must be certified at the time of the bid opening and must submit with the bid, the Local Business Entity Certification Number* as issued by the Procurement Department for the prime contractor or the applicable subcontractor.

*Note: If you wish to apply for Local Business Entity (LBE) certification, go to www.phila.gov/bids. Please allow sufficient time prior to bidding for processing of the LBE application.

EVALUATION AND AWARD

7. TYPES OF BIDDER RESTRICTED. Bidders must not be a party to more than one bid for the same article or service. A violation of this condition may, in the sole discretion of the Procurement Commissioner, result in rejection of any or all such bids in which the bidder has an interest.

8. RESPONSIVENESS. Subject to the right of the Procurement Commissioner to waive non-responsiveness as set forth below in this Section, these Terms and Conditions of Bidding and Contract and the specifications and requirements included in the Invitation and Bid are mandatory and must be strictly followed by all bidders in the preparation and submission of their bids. After bids are opened, the Procurement Department, and other City departments or agencies where appropriate or specified, shall review all bids for responsiveness to these Terms and Conditions of Bidding and Contract and the specifications and requirements included in the Invitation and Bid.

Any bid which is incomplete, obscure, conditional, or unbalanced, which contains additions not called for, or irregularities of any kind, including alterations or erasures, or which fails to conform in any respect to these Terms and Conditions of Bidding and Contract and the specifications and requirements included in the Invitation and Bid is non-responsive and shall be rejected, except where the Procurement Commissioner, in his/her sole discretion, determines that the non-responsiveness is not material to the Invitation and Bid or that a waiver of the non-responsiveness is otherwise permitted by the Invitation and Bid, by these Terms and Conditions of Bidding and Contract or by law. The Procurement Department's determination of non-responsiveness shall be final and any bid rejected as non-responsive shall not be eligible for contract award.

9. RESPONSIBILITY. Unless otherwise specified, after bids are opened, the Procurement Department, and other City departments or agencies where appropriate or specified, shall review and may investigate the responsibility, including, but not limited to, the qualifications, references, capacity and ability to perform the Contract resulting from the Invitation and Bid in accordance with its terms, and integrity, of the lowest responsive bidder. All determinations of bidder responsibility shall be vested in the sole discretion of the Procurement Commissioner and other City officials. Any bidder who is deemed not responsible shall be ineligible for award of the Contract.

Bidders deemed not responsible will be notified of such determination and the reasons therefore in writing by the Procurement Department, and shall have the right to contest the determination by submitting to the Procurement Department, within forty-eight (48) hours after receipt of its written determination, a written request for reconsideration that includes information relating to the bidder's qualifications and responsibility and demonstrating the insufficiency of the reasons stated in the written determination finding the bidder not responsible. Any further determination of a contesting bidder's responsibility shall be vested in the sound discretion of the Procurement Commissioner and other City officials.

10. CANCELLATION AND AWARD. The Procurement Commissioner, in his/her sole discretion, may cancel any Invitation and Bid prior to bid opening. After bid opening, the Procurement Commissioner, in his/her sole discretion, may reject all bids, if deemed in the best interest of the City. In all cases where a Contract award is made by the Procurement Department, the bidder is bound by the terms and conditions of the Invitation and Bid upon the submission of its bid. All bids are valid for a period of not less than 60 days, or as otherwise specified in the Invitation and Bid. If the bid has not been awarded within the specified period of time, the bid shall be valid for subsequent award only upon the express consent of the bidder, with no change to the submitted bid. Any price increases/decreases expressly provided for in the Invitation and Bid will be allowed. All Contract awards shall be made by the Procurement Department upon written notice to the bidder that is determined by the Procurement Department to be the lowest responsive and responsible bidder.

11. QUANTITIES AWARDED. For requirements contracts only, the articles and quantities of such articles as set forth in the Invitation and Bid are estimates and the Procurement Commissioner, in his/her sole discretion, may make an award for all or some of the articles bid and in such quantities as the Procurement Commissioner shall deem appropriate. For firm limit contracts, it is the City's intent to award based upon the quantities set forth in the Invitation and Bid, but the City reserves the right to award more or less.

12. DELIVERY, PRICE INCREASES AND TIE BIDS. All articles must be delivered at the price(s) bid, FOB Destination. Bids containing reservations of the right to increase the price(s) bid, including, but not limited to, late payment charges, will not be considered, except where the Procurement Commissioner, in his/her sole discretion, finds it in the City's best interest to do so. In the event of an absolute tie, the award decision will be made in the best interests of the City as determined by the Procurement Commissioner.

CONTRACT EXECUTION AND CONFORMANCE

13. CONTRACTS. Awards of contracts in amounts less than or equal to $30,000 shall become contracts binding upon the City upon written notice of award by the Procurement Commissioner. Awards of contracts in amounts greater than $30,000 shall not become contracts binding upon the City until after written notice of award is made and until after all of the following conditions have been satisfied:

a. Successful bidder posts sufficient performance security, as required in the Invitation and Bid, within the time specified in the written notice of award;

b. Successful bidder posts a payment bond or other payment security, if and as required by the Invitation and Bid, within the time specified in the written notice of award;

c. Approval of the Contract as to form by the City's Law Department;

d. Certification by the Director of Finance and City Controller as to the availability of funds; and

e. Execution of the Contract by the Procurement Commissioner.

The Procurement Commissioner may, in his/her sole discretion, cancel any Contract award if any of the above conditions (a-e) are not satisfied, or if the Procurement Commissioner, in his/her sole discretion, determines cancellation to be in the best interests of the City. The bidder agrees that in the event of such cancellation, it shall not have any claim against the City, including any claim for breach of contract or of any other legal duty, or for lost profits, costs, damages, or expenses of any kind.

14. PERFORMANCE SECURITY. The City of Philadelphia requires performance security for contracts greater than $30,000. If the amount of the contract to be awarded is greater than $30,000 but less than or equal to $500,000, the successful bidder is required to participate in the City's Master Performance Security Program by paying to the City a non-refundable fee of $5.00 per thousand dollars of the contract amount for firm limit contracts and $4.00 per thousand dollars of the contract amount for requirements contracts, or as otherwise specified. If the amount of the contract to be awarded is in excess of $500,000 the successful bidder is required to furnish an individual performance bond, issued by a surety approved by the City on a form prepared by the City's Law Department and in the amount specified in the notice of contract award. The successful bidder is also required to pay a bond preparation fee to the City's Law Department in an amount prescribed by Chapter 17-700 of The Philadelphia Code; a schedule of such fees may be obtained from the Procurement Department's Public Information Office.

15. INSURANCE. Unless otherwise specified, the successful bidder (referred to in this Section as "Contractor") shall, at its sole cost and expense, procure and maintain in full force and effect, during the entire period of the Contract (including any applicable warranty and/or renewal periods), the minimum types of insurance specified below. All insurance shall be procured from reputable insurers authorized to do business in the Commonwealth of Pennsylvania and shall be acceptable to the City. All insurance required herein shall be written on an "occurrence" basis and not a "claims-made" basis. The City of Philadelphia, its officers, employees, and agents are to be named as additional insured on all policies required hereunder, except the Workers' Compensation and Employers' Liability. Also, an endorsement is required stating that the coverage afforded these parties as additional insured will be primary to any other coverage available to them. The City's coverage as an additional insured shall be primary coverage. The insurance shall provide for at least thirty (30) days prior written notice to be given to the City in the event coverage is materially changed, canceled or non-renewed. Certificates of insurance evidencing the required coverages shall be submitted to the City within fifteen (15) days of notice of contract award. The City reserves the right to require the Contractor to furnish certified copies of the original policies of all insurance required hereunder at any time upon fifteen (15) days prior written notice. The insurance requirements set forth herein are not intended and shall not be construed to modify, limit, or reduce the indemnifications made in this Contract by the Contractor to the City of to limit the Contractor's liability under this Contract to the limits of the policies of insurance required to be maintained by the Contractor hereunder.

(a) WORKERS COMPENSATION AND EMPLOYERS LIABILITY

(1) Workers' Compensation – Statutory limits

(2) Employers Liability – $100,000 Each Accident – Bodily Injury by Accident; $100,000 Each Employee – Bodily Injury by Disease; $500,000 Policy Limit – Bodily Injury by Disease

(3) Other states insurance including Pennsylvania

(b) GENERAL LIABILITY INSURANCE

(1) Limit of Liability: $1,000,000 per occurrence combined single limit for bodily injury (including death) and property damage liability.

(2) Coverage: Premises operation: Blanket Contractual liability; Personal Injury liability; Products and completed operations; Independent Contractors; Employees as additional insured; Cross liability; Broad form property damage (including loss of use) liability; Asbestos abatement liability coverage (Note: Required for asbestos abatement projects only).

(c) AUTOMOBILE LIABILITY

(1) Limit of Liability: $1,000,000 per occurrence combined single limit for bodily injury (including death) and property damage liability.

(2) Coverage: owned, non-owned and hired vehicles.

16. INDEMNIFICATION. All bidders shall indemnify, defend and hold harmless the City, its officers, employees and agents from and against any and all losses, costs (including, but not limited to, litigation and settlement costs and counsel fees), claims, suits, actions, damages, liabilities and expenses, occasioned wholly or in part by the bidder's act or omission or fault or negligence or the act or omission or fault or negligence of bidder's agents, subcontractors (including suppliers), employees or servants in connection with

the Contract, including, but not limited to, those acts or omissions or faults or negligence in connection with loss of life, bodily injury, personal injury, damage to property, contamination or adverse effects on the environment, the bidder's default under the Contract, losses incurred by the City's Master Performance Security Program, failure to pay subcontractors and suppliers and any infringement or violation of any proprietary right (including, but not limited to, patent, copyright, trademark, service mark and trade secret). This obligation to indemnify, defend and hold harmless the City, its officers, employees and agents shall survive the termination of the Contract resulting from the Invitation and Bid.

17. FAILURE TO EXECUTE CONTRACT. Any bidder not lawfully released from its bid, who refuses to execute a contract in accordance with its bid or who fails, refuses or is unable to furnish any required payment security, performance security or insurance, as may be required by the Invitation and Bid and/or these Terms and Conditions of Bidding and Contract, shall be liable for the entire amount of its bid security, as liquidated damages to the City; or if bid security is furnished under the Annual Master Bid Security Program, for 10% of the amount of its bid, as liquidated damages to the City; or where the damages are readily ascertainable by the City, for the actual loss, cost or damage incurred by the City as a result of its failure to execute the contract or to furnish such bonds, performance security or insurance.

18. ASSIGNMENT. The successful bidder shall not assign the Contract resulting from the Invitation and Bid, or any part of the Contract, or any right to any monies to be paid under the Contract, or delegate performance of the Contract, without obtaining the prior written consent of the Procurement Commissioner. The decision whether to consent to an assignment is within the Procurement Commissioner's sole discretion. In no case shall the Procurement Commissioner's consent to the assignment of any monies to be paid under the Contract relieve the bidder from faithful performance of any of its obligations under the Contract or change any of the terms and conditions of the Contract. Any purported assignment in violation of this provision shall be of no effect.

19. DEFAULT. All work performed and goods and services rendered by a successful bidder (referred to in this Section as "Contractor") under any Contract resulting from the Invitation and Bid shall strictly conform to these Terms and Conditions of Bidding and Contract and the specifications and requirements contained in the Invitation and Bid. The successful bidder shall comply with all applicable federal, state and local laws, statutes and ordinances and the regulations of all governmental departments, boards, agencies, and commissions. The following shall constitute events of default under any Contract resulting from the Invitation and Bid:

a. Failure by Contractor to comply with any provision or Section of the Contract, including the bid specifications contained in the Invitation and Bid and these Terms and Conditions of Bidding and Contract and/or failure by Contractor to comply with any federal, state and local law, statute, ordinance or regulation of any governmental department, board, agency and commission.

b. Falseness of any representation or warranty made in the Contract or other document(s) submitted to the City by Contractor in connection with the Invitation and Bid.

c. Failure by Contractor to pay its suppliers or subContractors, misappropriation of any funds provided under the Contract or failure to notify City upon discovery of any misappropriation.

d. A violation of law by Contractor which results in its making a guilty plea, a plea of nolo contendere, or conviction of a criminal offense by Contractor, its directors, employees, or agent or indictment or charges, in the sole judgment of the Procurement Commissioner, adversely affect the performance of the Contract.

e. Failure by Contractor to comply with the Mayoral Executive Order establishing the City's antidiscrimination policy relating to the participation of minority, woman and disabled owned disadvantaged business enterprises.

f. The Procurement Department's determination that the Contractor is not a responsible bidder on the Invitation and Bid, where such determination is made, and is based upon, information received after award of the Contract and/or after execution of the Contract by the Procurement Commissioner and/or after satisfaction of any or all other conditions of a binding Contract set forth in Section 2 above.

g. Any other act or omission identified in these Terms and Conditions of Bidding and Contract or elsewhere in the Invitation and Bid as an event or condition constituting default.

Upon the occurrence of an event of default, the Procurement Commissioner, in his/her sole discretion, may require Contractor to cure the default within a period of time to be determined by the Procurement Commissioner, or terminate the Contract in whole or in part and exercise any one or more of the following remedies (which remedies may be concurrent and shall be in addition to and not in lieu of the remedies available to the City at law, in equity, under any bond(s) filed in connection with the contract or under other sections of these Terms and Conditions of Bidding and Contract and Contract):

a. Purchase goods and/or services from others in substitution of goods or services that were not furnished or performed by Contractor or that were defective or otherwise in violation of any provision of the Contract; the cost of such substituted goods and services shall be the sole responsibility of Contractor and Contractor agrees to pay immediately, upon receipt of the City's invoice, the difference between the Contract price and the substituted product or service cost, plus any other loss, cost or damages incurred by the City.

b. Appropriate to the payment of the difference between the Contract price and the cost of such substitute goods or services, and the amount of any

other loss, cost or damage incurred by the City as a result of the default, any monies which may then be due and payable to Contractor under this Contract or any other Contract that Contractor then has with the City.

The City shall notify Contractor in writing of such termination, which shall be effective as of the date specified in the notice of termination (the "Termination Date"). The Procurement Commissioner may, in his/her sole discretion, require Contractor to continue to furnish all goods and perform all services required under the Contract until the Termination Date, in which case, subject to the remedies enumerated above, the successful bidder shall be paid in accordance with the Contract therefore. If the City requires Contractor to cure the event(s) of default, or to continue to furnish goods or services until the Termination Date, and Contractor refuses or fails to do so, then such failure shall itself be deemed an event of default under this Section, for which the City may exercise any of its rights hereunder.

20. PAYMENT FOR EQUIPMENT. Unless otherwise provided in the bid specifications, when equipment involves installation, (which shall also be interpreted to mean erection and/or setting up or placing in position for service or use) and/or testing, and where such installation or testing is delayed though no fault of the contractor, contractor shall be entitled to a payment equal to 50% of the price bid when such equipment is delivered on site and to a further payment equal to an additional 25% of the price bid when the equipment is installed and ready for test. The balance shall be paid only after the equipment is tested and found to be satisfactory by the City. If the equipment must be tested, but installation is not required to be made by the supplier or if the equipment must be installed but testing is not required, and the installation or testing is delayed through no fault of the contractor, contractor shall be entitled to a payment equal to 75% of the price bid at the time of delivery and the balance shall be paid after satisfactory testing and/or installation, as required.

TAX MATTERS

21. TAX EXEMPTION. The City of Philadelphia is exempt from the payment of any federal excise or transportation taxes and any Pennsylvania sales tax. The price bid must be net, exclusive of taxes. However, when under established trade practice any federal excise tax is included in list prices, bidder may quote the list price and shall show separately the amount of the federal tax, either as a flat sum or as a percentage of the list price, which shall be deducted by the City. In the event bidder pays any sales or use tax, bidder hereby assigns to City, or City's agent, all of its rights, title and interest in any sales or use tax which may be refunded as a result of the purchase of any articles furnished in connection with the Contract and bidder, unless directed by the City, shall not file a claim for any sales or use tax refund subject to this assignment. Bidder authorizes the City, in City's name or the name of bidder, to file a claim for refund of any sales or use tax subject to this assignment.

22. TAX INDEBTEDNESS. The City of Philadelphia does not wish to do business with tax delinquents or other businesses indebted to the City. In furtherance of this policy, the following certifications have been developed and shall form a part of any Contract resulting from the Invitation and Bid. The successful bidder or other entity Contracting with the City is referred to below as the "Contractor".

a. Contractor's Certification of Non-Indebtedness -- Contractor hereby certifies and represents that Contractor and Contractor's parent company(ies) and subsidiary(ies) are not currently indebted to the City of Philadelphia (the "City") and will not at any time during the term of this Contract (including any extensions or renewals thereof) be indebted to the City, for or on account of any delinquent taxes (including, but not limited to, taxes collected by the City on behalf of the School District), liens, judgments, fees or other debts for which no written agreement or payment plan satisfactory to the City has been established. In addition to any other rights or remedies available to the City at law or in equity, Contractor acknowledges that any breach or failure to conform to this certification may, at the option of the City, result in the withholding of payments otherwise due to Contractor and, if such breach or failure is not resolved to the City's satisfaction within a reasonable time frame specified by the City in writing, may result in the offset of any such indebtedness against said payments and/or the termination of this Contract for default (in which case Contractor shall be liable for all costs, losses and other damages resulting from the termination).

b. Subcontractor's Certification of Non-Indebtedness -- Contractor shall require all subcontractors performing work in connection with this Contract ("subcontractor" shall also include suppliers providing goods or materials) to be bound by the following provision, and Contractor shall cooperate fully with the City in exercising the rights and remedies described below or otherwise available at law or in equity:

"Subcontractor hereby certifies and represents that subcontractor and subcontractor's parent company(ies) and subsidiary(ies) are not currently indebted to the City of Philadelphia ("City"). and will not at any time during the term of Contractor's Contract with the City (the "Contract"), including any extensions or renewals thereof, be indebted to the City, for or on account of any delinquent taxes (including, but not limited to, taxes collected by the City on behalf of the School District of Philadelphia), liens, judgments, fees or other debts for which no written agreement or payment plan satisfactory to the City has been established. In addition to any other rights or remedies available at law or in equity, subcontractor acknowledges that any breach of or failure to conform to this certification may, at the option of the City, result in the withholding of payments otherwise due to subcontractor for services rendered in connection with the Contract and, if such breach or failure is not resolved to the City's satisfaction within a reasonable time frame specified by the City in writing, may result in the offset of any such indebtedness against said payments otherwise due to subcontractor and/or the termination of subcontractor for default (in which case subcontractor shall be liable for all costs, losses and other damages resulting from the termination)."

23. TAX REQUIREMENTS. Any person or entity who bids on and/or is awarded a contract by the City and/or School District of Philadelphia, is subject to Philadelphia's business tax ordinances and regulations. The City Solicitor has determined that anyone who is awarded a contract by the City and/or School District pursuant to a bid has entered into a contract within the City, and the subsequent delivery of goods into the City or performance of services within the City constitutes doing business in the City and subjects the successful bidder, including but not limited to, one or more of the following taxes:

a. Business Privilege Tax
b. Net Profits Tax
c. City Wage Tax

The successful bidder, if not already paying the aforesaid taxes, is required to apply to the Department of Revenue, 1401 John F. Kennedy Blvd., Public Service Concourse, Municipal Services Building, Philadelphia, PA 19102 for a tax identification number and to file appropriate business tax returns as provided by law. Questions should be directed to the Business and Earnings Tax Unit at (215) 686-6600.

GENERAL INFORMATION

24. COMPLIANCE WITH LAWS. All goods and services and all documents and other materials furnished under the Contract shall conform with all applicable federal, state and local laws, statutes and ordinances and the applicable rules, regulations, methods and procedures of all governmental boards, bureaus, offices, commissions and other agencies. Contractor shall maintain during the term of the Contract all licenses, and authorizations required by any applicable federal, state or local law or regulation. Applicable law shall include, without limitation, the laws stated in paragraphs 25 through 31 herein.

25. NONDISCRIMINATION.

a. Any Contract awarded pursuant to the Invitation and Bid is entered into under the terms of the Philadelphia Home Rule Charter and in its performance, Contractor shall not discriminate nor permit discrimination against any person because of race, color, religion, national origin, or sex. Such discrimination shall constitute an event of default under this Contract entitling City to terminate this Contract forthwith. This right of termination shall be in addition to any other rights or remedies as provided herein in Section 19 or otherwise available to the City at law or in equity.

b. In accordance with Chapter 17-400 of The Philadelphia Code, Contractor agrees that its payment or reimbursement of membership fees or other expenses associated with participation by its employees in an exclusionary private organization, insofar as such participation confers an employment advantage or constitutes or results in discrimination with regard to hiring, tenure of employment. promotions, terms, privileges or conditions of employment, on the basis of race, color, sex, sexual orientation, gender identity, religion, national origin or ancestry, shall constitute an event of default under this Contract and shall entitle the City to all rights and remedies as provided herein in Section 19 or otherwise available to the City at law or in equity. Contractor agrees to include the immediately preceding sentence, with appropriate adjustments for the identity of the parties, in all subcontracts which are entered into pursuant to this Contract. Contractor further agrees to cooperate with the Commission on Human Relations of the City of Philadelphia in any manner which the said Commission deems reasonable and necessary for the Commission to carry out its responsibilities under Chapter 17-400 of The Philadelphia Code. Failure to so cooperate shall constitute an event of default under this Contract entitling the City to all rights and remedies as provided herein in Section 19 or otherwise available to the City at law or in equity.

26. ETHICS REQUIREMENTS. To preserve the integrity of City employees and maintain public confidence in the competitive bidding system, the City intends to vigorously enforce the various ethics laws as they relate to City employees in the bidding and execution of City contracts. Such laws are in three categories:

a. Gifts. Executive Order No. 02-04 prohibits City employees from soliciting or accepting anything of value from any person or entity seeking to initiate or maintain a business relationship with the City of Philadelphia, its departments, boards, commissions, and agencies. Bidder understands and agrees that if it offers anything of value to a City official or employee under circumstances where the receipt of such item would violate the provisions of this Executive Order shall be subject to sanctions with respect to future City Contracts. Such sanctions may range from disqualification from participation in a particular Contract to debarment, depending on the nature of the violation. All bidders, agents or intermediaries who are solicited for gifts or gratuities by City employees are urged to report these incidents to the Inspector General, Aramark Tower, Third Floor, 1101 Market Street, Philadelphia, PA 19107.

b. City Employee Interest in City Contracts. In accordance with Section 10-102 of The Philadelphia Home Rule Charter, no bid shall be accepted from, or Contract awarded to, any City employee or official, or any firm in which a City employee or official has a direct or indirect financial interest. All bidders are required to disclose any current City employees or officials who are employees or officials of the bidder's firm, or who otherwise would have a financial interest in the Contract.

c. Conflict of Interest. Both the State Ethics Act and the City Ethics Code prohibit a public employee from using his/her public office or any confidential information gained thereby to obtain financial gain for himself/herself a member of his/her immediate family, or a business with which he/she or a member of his/her immediate family is associated. "Use of public office" is avoided by the employee or official publicly disclosing the conflict and disqualifying himself/herself from official action in the matter, as provided in The Philadelphia Code Section 20-608.

27. NORTHERN IRELAND. Section 17-104(2)(b) of The Philadelphia Code prohibits the City from accepting

bids from companies that do business in Northern Ireland, unless that business has implemented the fair employment principles embodied in the MacBride Principles. In furtherance of this ordinance, bidder makes the following certification and representations:

a. In accordance with Section 17–104 of the Philadelphia Code, bidder by execution of its bid certifies and represents that (i) bidder (including any parent company, subsidiary, exclusive distributor, or company affiliated with Bidder) does not have, and will not have at any time during the term of any Contract resulting from this bid (including any extensions thereof), any investments, licenses, franchises, management agreements or operations in Northern Ireland, and (ii) no product to be provided to the City under any resulting Contract will originate in Northern Ireland. unless Bidder has implemented the fair employment principles embodied in the MacBride Principles.

b. In the performance of any Contract resulting from this bid, Bidder agrees that it will not utilize any suppliers or subcontractors at any tier (i) who have (or whose parent subsidiary, exclusive distributor of company affiliate have) any investments, licenses, franchises, management agreements or operations in Northern Ireland or (ii) who will provide products originating in Northern Ireland unless said supplier or subcontractor has implemented the fair employment principles embodied in the MacBride Principles. Bidder further agrees to include provisions with this subparagraph (b), with appropriate adjustments for the identity of the parties, in all subcontracts and supply agreements which are entered into in connection with the performance of any resulting Contract.

c. Bidder agrees to cooperate with the City's Director of Finance in any manner which the said Director deems reasonable and necessary to carry out the Director's responsibilities under Section 17–104 of The Philadelphia Code. Bidder expressly understands and agrees that any false certification or representation in connection with this subparagraph (c) and/or any failure to comply with the provisions of this subparagraph (c) shall constitute a substantial breach of any Contract resulting from the Invitation and Bid entitling the City to all rights and remedies provided in this bid or otherwise available in law (including, but not limited to, Section 17–104 of the Philadelphia Code) or at equity. In addition, it is understood that false certification or representation is subject to prosecution under IS Pa.C.S. Section 4904.

28. BUSINESS, CORPORATE AND SLAVERY ERA INSURANCE DISCLOSURE. In accordance with Section 17–104 of The Philadelphia Code, the successful bidder, after award of the Contract, will complete an affidavit certifying and representing that the bidder (including any parent company, subsidiary, exclusive distributor or company affiliated with bidder) has searched any and all records of the bidder or any predecessor business entity regarding records of investments or profits from slavery or slaveholder insurance policies during the slavery era. The names of any slaves or slaveholders described in those records must be disclosed in the affidavit.

The bidder expressly understands and agrees that any false certification or representation in connection with this Paragraph and/or any failure to comply with the provisions of this Paragraph shall constitute a substantial breach of this Contract entitling the City to all rights and remedies provided in this Contract or otherwise available in law (including, but not limited to, Section 17–104 of The Philadelphia Code) or equity and the Contract will be deemed voidable. In addition, it is understood that false certification or representation is subject to prosecution under Title 18 Pa.C.S.A. Section 4904.

29. PHILADELPHIA 21st CENTURY MINIMUM WAGE STANDARD. If Contractor is an Employer, as defined in Philadelphia Code Sections 17–1302(5) and 17–1303 and if this is a Service Contract, as defined in Code Section 17–1302(9), Contractor shall comply with the minimum compensation standards by providing to those employees 1) an hourly wage, excluding benefits, at least 150 percent of the federal minimum wage, and health benefits to each full-time, non-temporary, non–seasonal covered Employee, as more fully set forth at Philadelphia Code Chapter 17–1300, 2) to the extent the Contractor provides health benefits to any of its employees, provide each full-time, non-temporary, non–seasonal covered Employee with health benefits at least as valuable as the least valuable health benefits that are provided to any other full-time employees of the Contractor; and 3) provide to each full-time, non–temporary, non-seasonal covered Employee at least the minimum number of earned sick leave days required by Code Section 17–1305(2). By submission of its Bid, Contractor so acknowledges and certifies its compliance with Chapter 17–1300 and shall promptly provide to the City, at its request, all documents and information further verifying its compliance with the requirements of this Chapter. Furthermore, Contractor shall notify each affected employee what wages are required to be paid.

The Managing Director's Office (MDO) may grant a partial or total waiver of Chapter 17–1300 based on specific stipulated reasons elaborated in Section 17–1304.

30. PROTECTION OF DISPLACED CONTRACT WORKERS. If this bid is for the furnishing of the following services, Security, Janitorial, Building Maintenance, Food and Beverage, Hotel or Non–Professional Health Care Services, then this bid is subject to the "Protection of Displaced Contract Workers" Law, Chapter 9–2300 of the Philadelphia Code. The successful Bidder, if it is a Successor Contractor is required, among other things, to retain certain service employees of the Predecessor Contractor for a ninety day period.

31. EQUAL BENEFITS. If this is a Service Contract, as defined in Philadelphia Code Section 17–1901(4), for an amount in excess of $250,000, Contractor shall, for employees who reside in the City or employees who are non-residents subject to City wage tax under Philadelphia Code Section 19–502(b), extend the same employment benefits the Contractor extends to spouses of its employees to life partners of such employees. By submission of its Bid, Contractor so acknowledges and certifies its compliance with Chapter 17–1900 of the

Philadelphia Code and shall notify its employees of the employment benefits available to life partners pursuant to Chapter 17–1900. Following the award of a contract subject to Chapter 17–1900 and prior to execution of the contract by the City, Contractor shall certify that its employees have received the required notification of the employment benefits available to life partners and that such employment benefits will actually be available, or that the Contractor does not provide employment benefits to the spouses of married employees.

Contractor's failure to comply with the provisions of Chapter 17–1900 or any discrimination or retaliation by the Contractor against any employee on account of having claimed a violation of Chapter 17–1900 shall be a material breach the Service Contract.

TERMS AND CONDITIONS OF BIDDING AND CONTRACT

SIGNING OF BIDS

This contract consists of the Invitation and Bid (including exhibits and attachments), any addenda thereto issued by the City and the foregoing Terms and Conditions of Bidding and Contract (collectively, the "contract") and contains all the terms, conditions and requirements agreed upon by the parties. The terms "contract" and "agreement," whether capitalized or uncapitalized, shall have the foregoing meaning wherever they are used in the invitation and Bid, addenda thereto, the Terms and Conditions of Bidding and Contract, and this page. No other contract or agreement, oral or otherwise, regarding the subject matter of the contract shall be deemed to exist or to bind any party hereto or to vary any of the terms contained in the contract.

This contract may not be changed, amended or renewed, in whole or in part, except by a written amendment signed by the parties. No waiver by the City of any breach or noncompliance by the undersigned with any provision of this contract shall relieve the undersigned of any of its obligations or representations made under this contract.

This contract and all disputes arising under this contract shall be governed, construed and decided in accordance with the laws of the Commonwealth of Pennsylvania. The parties agree that any lawsuit, action, claim or legal proceeding involving, directly or indirectly, any matter arising out of or related to this contract or the relationship created or evidenced thereby, shall be brought exclusively in the United States District Court for the Eastern District of Pennsylvania or the Court of Common Pleas of Philadelphia County. It is the express intent of the parties that jurisdiction over any lawsuit, action, claim, or legal proceeding shall lie exclusively in either of these two forums. The parties further agree not to raise any objection to any lawsuit, action, claim or legal proceeding which is brought in either of these two forums and the parties expressly consent to the jurisdiction and venue of these two forums. The parties further agree that service of original process in any such lawsuit, action, claim or legal proceeding may be duly affected by mailing a copy thereof, by certified mail, postage prepaid to the addresses specified in the Invitation and Bid and/or this page.

NOTE: ANY BID THAT IS NOT EXECUTED IN ACCORDANCE WITH THE INSTRUCTIONS PROVIDED BELOW OR THAT DOES NOT INCLUDE STREET ADDRESS, CITY, STATE AND PHONE NUMBER, MAY, IN THE SOLE DISCRETION OF THE PROCUREMENT COMMISSIONER, BE REJECTED.

SIGNING OF BIDS:
If bid is by an INDIVIDUAL or a PARTNERSHIP, or if the bid does not exceed $30,000, date and sign the bid here, with the original signatures, in ink.

This _____day of_____20

_____ _____
(Signature of Owner, Partner) **(Type or Print Name and Title)**

_____
(Business Name of Bidder)

_____ _____
(Address, including Zip Code) **(Telephone Number, including Area Code)**

If the bid is a CORPORATION, date and sign the bid here with original signatures, in ink, by (a) President or Vice President of the Corporation AND (b) Secretary, Assistant Secretary, Treasurer or Assistant Treasurer of the Corporation; and (c) affix the seal of the Corporation. If the form is not signed by the President or a Vice President and Secretary, Assistant Secretary, Treasurer or Assistant Treasurer, attach a duly certified corporate resolution authorizing the person signing in place of such officers to execute this bid for the corporation.

This_____day of_____20

CORPORATE SEAL

_____
(Corporate or Business Name of Bidder)

_____ _____
(Address, including Zip Code) **(Telephone Number, including Area Code)**

_____ _____
(Signature of President or Vice President) **(Signature of Secy., Asst. Secy., Treas. or Asst. Treas.)**

_____ _____
(Type or Print Name and Title) **(Type or Print Name and Title)**

APPROVED AS TO FORM **CONTRACT EXECUTION**

_____ _____
(Assistant City Solicitor) **(Procurement Commissioner)**