PROCUREMENT DEPARTMENT
Rm 120 Municipal Services Building
Philadelphia, PA 19102-1685
FAX: (215) 686-4716

CITY OF PHILADELPHIA

Mary E. Stitt
Procurement Commissioner

December 15, 2015

BID NUMBER: S6Z61520

TITLE: Electrical Supplies-Street Lighting

DEPARTMENT: Various

DATE TO OPEN: January 20, 2016 at 10:30 AM

ADDENDUM # 1

TO ALL BIDDERS:
You are hereby notified of the following changes to the above mentioned bid:

Please see attachment that was not included with the initial bid.

Please sign, date and return this addendum with your bid to the Procurement Department, 1401 J.F.K Boulevard, Bid Room 170A, Philadelphia, PA 19102-1685 as it now becomes a part of the proposal.

F. Johnson, Buyer

_____
AUTHORIZED SIGNATURE

_____
FIRM NAME (PRINT)

_____
DATE

FJ/ cw

Attachments- Street Lighting Drawings

Drawing for Item 2.2.1.1- CC# 31010 050 020

ANCHOR BASE POLE

APPROVAL

6FT ARM 6061 T6 AL CATALOG # U2006800-P-BZ

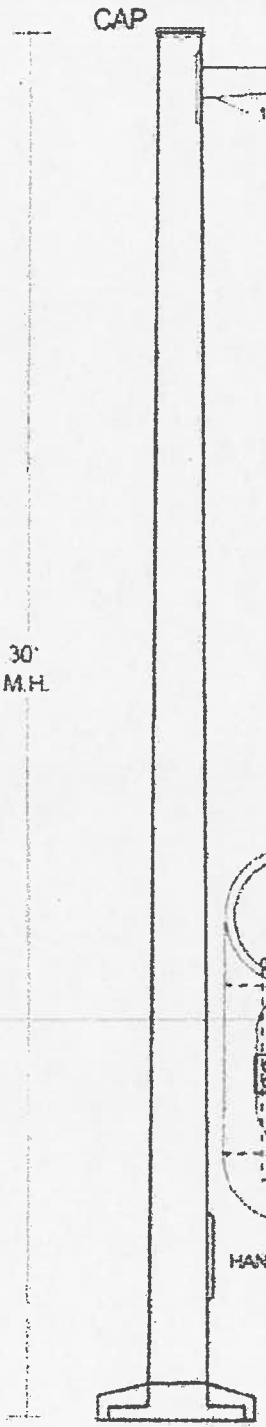

POLE SPECIFICATIONS

FILAMENT WOUND COMPOSITE SHAFT CONSISTING OF CONTINUOUS FIBERGLASS ROVING COMBINED WITH THERMOSETTING POLYESTER RESIN WOUND IN LOW ANGLE HELICALS AND HIGH ANGLE HOOPS PROVIDING FOR MAXIMUM RESISTANCE TO DEFLECTION AND SHEAR. POLE FINISH IS A 10 TO 15 MIL THICK POLYURETHANE FINISHING RESIN.

COLOR: BRONZE RAL 7022
FINISH: SMOOTH

POLE DEFLECTION @ 36" 415.7# OR GREATER
POLE MUST WITHSTANDTOTAL LOAD OF 831.34# WITHOUT FAILURE
ANSIC136.20 ASTM4923 CLASS 1 AASHTO LTS-4-2001

POLE WEIGHT : 120 LBS
POLE TIP: 4.5 INCHES NOMINAL
POLE BASE : 8.5 INCHES NOMINAL

Handhole Specifications

Reinforced composite handhole cover
4" x 12" Minimum Cutout
(2) 1/4 x 20 SS hex nut w/ locknut
18" Insulated attachment lanyard
Non-conductive backing bar
Homac RB6214SL Terminal Block
Mounted on 6 x 14 fiberglass board

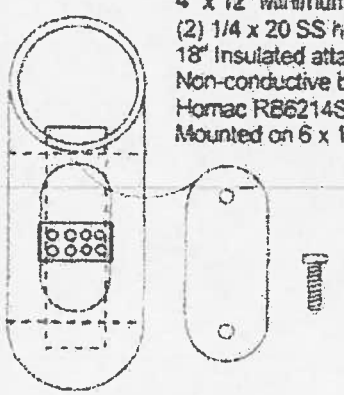

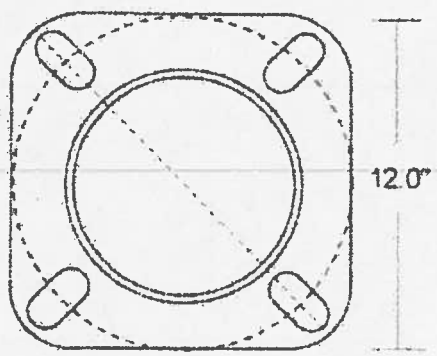

Base Specifications

356T6 cast aluminum w/ 6063 t4 tubing
1.25 thick base casting 10"-12" bolt circle for 1" bolts
1.62 X 2.0 Slotted bolt holes
Akron Foundry AB10-S-MOD
Anchor base secured to fiberglass pole with Methacrylate adhesive designed for metal to fiberglass bonding.

ALLIANCE COMPOSITES

City of Philadelphia Specification rev 05/27/2014
Alliance Composites # AH30FHDS-CPS-11
11.0" Anchor Base Smooth Pole with Slip Over Shroud

Drawing for Item 2.2.1.2- CC 31010 050 021

ANCHOR BASE POLE

APPROVAL

6FT ARM 6061 T6 AL CATALOG # U2006800-P-BZ

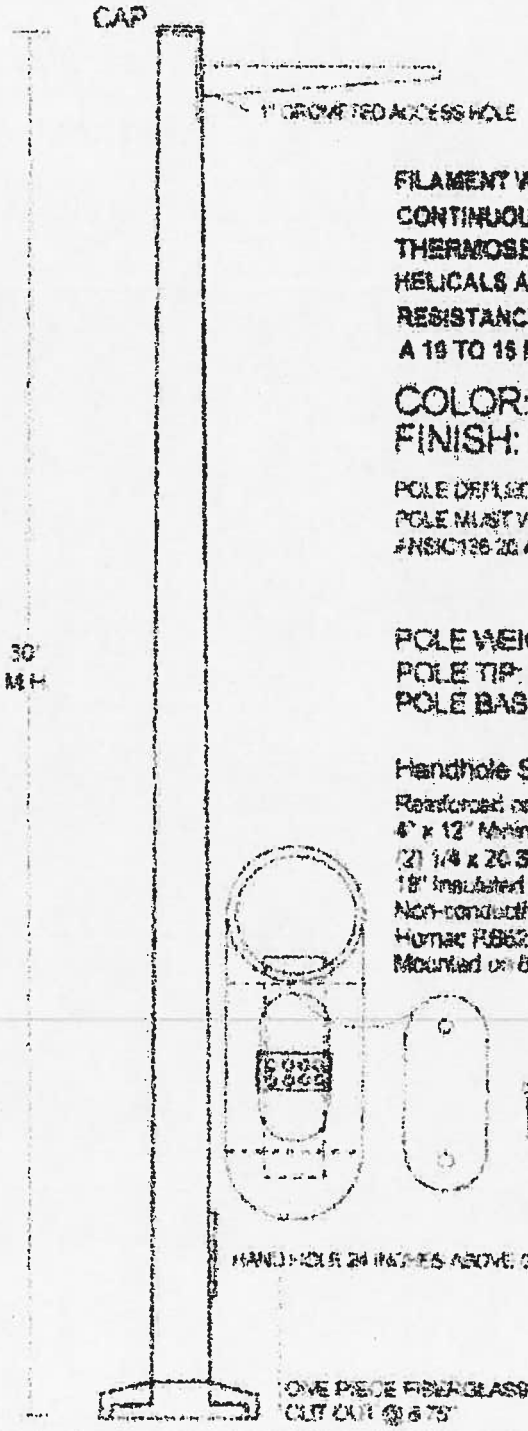

POLE SPECIFICATIONS

FILAMENT WOUND COMPOSITE SHAFT CONSISTING OF CONTINUOUS FIBERGLASS ROVING COMBINED WITH THERMOSETTING POLYESTER RESIN WOUND IN LOW ANGLE HELICALS AND HIGH ANGLE HOOPS PROVIDING FOR MAXIMUM RESISTANCE TO DEFLECTION AND SHEAR. POLE FINISH IS A 10 TO 15 MIL THICK POLYURETHANE FINISHING RESIN.

COLOR: BRONZE RAL 7022
FINISH: SMOOTH

POLE DEFLECTION @ 36" 415.7# OR GREATER
POLE MUST WITHSTANDTOTAL LOAD OF 831.34# WITHOUT FAILURE
ANSIC136-20 ASTM4929 CLASS 1 AASHTO LTS-4-2001

POLE WEIGHT : 120 LBS
POLE TIP: 4.5 INCHES NOMINAL
POLE BASE : 8.5 INCHES NOMINAL

Handhole Specifications

Reinforced composite handhole cover
4" x 12" Minimum Cutout
(2) 1/4 x 20 SS hex nut w/ locknut
18" insulated attachment lanyard
Non-conductive backing bar
Hornac R86214SL Terminal Block
Mounted on 6 x 14 fiberglass board

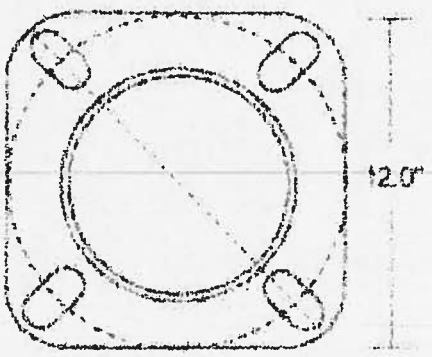

Base Specifications

356T6 cast aluminum w/ 6063 t4 tubing
1.25 thick base casting 10"-12" bolt circle for 1" bolts
1.62 X 2.0 Slotted bolt holes
Akron Foundry AB10-S-MOD
Anchor base secured to fiberglass pole with Methacrylate adhesive designed for metal to fiberglass bonding

ALLIANCE COMPOSITES	City of Philadelphia Specification rev 05/27/2014 Alliance Composites # AH30FHDS-CPS-11 11.0" Anchor Base Smooth Pole with Slip Over Shroud

PAGE 1 OF 2

MARATHON

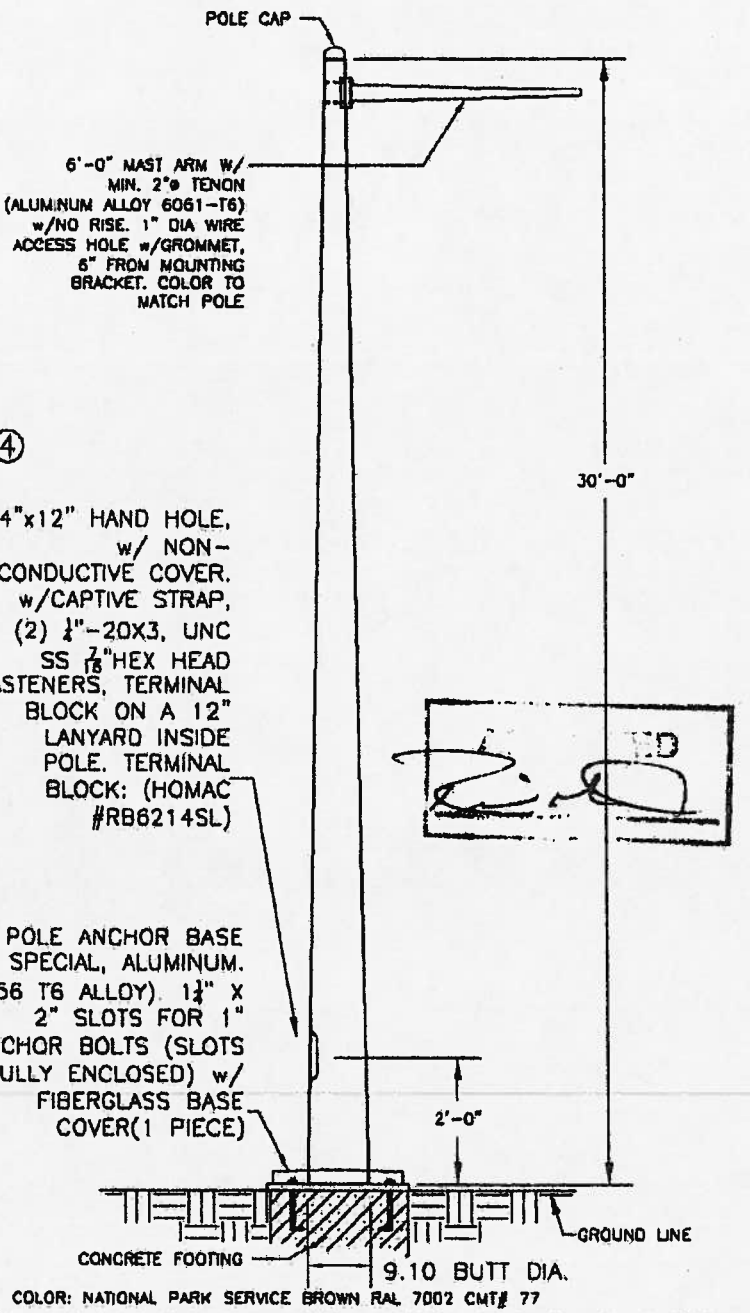

COLOR: NATIONAL PARK SERVICE BROWN RAL 7002 CMT# 77

ARM DRILLING DETAIL ①③

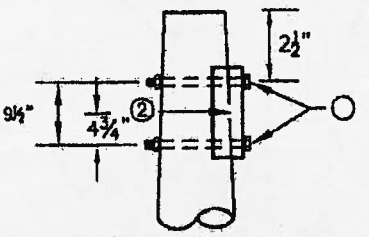

①③ ¾" DIA THRU HOLES
② 1" DIA WIRE EXIT

"POLE IS DESIGNED PER THE REQUIREMENTS SET FORTH IN 2001 AASHTO STANDARD SPECIFICATIONS FOR STRUCTURAL SUPPORT FOR HIGHWAY SIGNS, LUMINAIRES & TRAFFIC SIGNALS"

POLE STRENGTH TEST IS 1,000 lbs TRANSVERSE LOAD APPLIED 1'-0" BELOW TIP

ORIENTATION VIEWED FROM TOP OF POLE

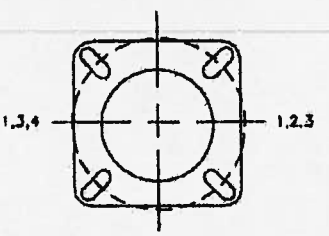

C M T	CMT 41 Wood Street Estill, SC 29918 800-416-4276 www.cmtpoles.com	CITY OF PHILADELPHIA	
		CAT#: MA30-D-50-S6-77-H-PC-TBF-BC5	
QUANTITY:	JOB NUMBER:	SPECS: ANSI C136.2	WIND VEL.: 80 @ 1.3
QUOTE#:	REF#:	TOT. LENGTH: 30'-0"	LUM. WEIGHT: N/A lbs
		EMBED. DEPTH: N/A	LUM. EPA: 10 sq.ft.
		TIP DIA: 3.70"	STATIC DEFL.:
		WEIGHT: 272 lbs	TOTAL DEFL.: 10%
		DRAWN BY: PLF	DATE: 10/20/2014

REV.	DATE	BY	REMARKS
C	10/20/14	PLF	SIZE TO "C" TOP
C	10/20/14	PLF	ELIMINATE MOUNTING BOARD CHANGE COLOR

PAGE 2 OF 2

MARATHON COMPOSITE POLES

DOOR DETAIL

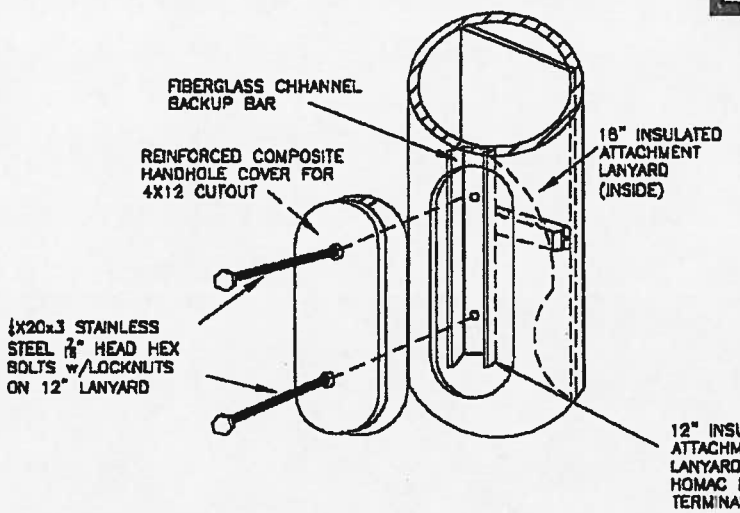

"POLE IS DESIGNED PER THE REQUIREMENTS SET FORTH IN 2001 AASHTO STANDARD SPECIFICATIONS FOR STRUCTURAL SUPPORT FOR HIGHWAY SIGNS, LUMINAIRES & TRAFFIC SIGNALS"

ANCHOR BASE
AKRON FOUNDRY
A18-S-MOD
(8-1992) SLEEVE BASE

ANCHOR BASE DETAIL

11"NOMINAL BOLT CIRCLE

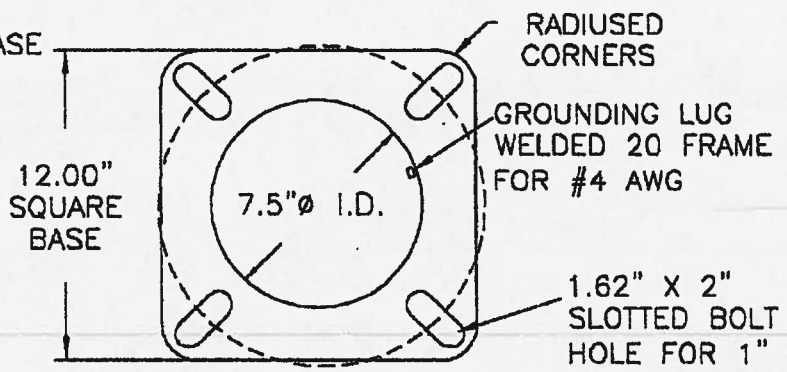

ANCHOR BASE DETAIL 356T6 CAST ALUMINUM WITH 6063-T4 TUBING

THE ALUMINUM ANCHOR BASE SHALL BE THE AKRON FOUNDRY A18-S-MOD(8-1992) UNIT WHICH HAS BEEN SPECIFIED AND IS USED BY THE CITY OF PHILADELPHIA. THE ANCHOR BASE IS TO BE SECURED TO THE FIBERGLASS POLE WITH METHACRYLATE ADHESIVE DESIGNED FOR METAL TO FIBERGLASS BONDING.

CMT 41 Wood Street Estill, SC 29918 800-416-4276 www.cmtpoles.com				CITY OF PHILADELPHIA	
				CAT. NO.: MA30-D-50-S6-77H-PC-TBF-BC5	
QUANTITY:	JOB NUMBER:			SPECS: AASHTO 2001	WIND VEL.:
QUOTE#:	REF:			TOT. LENGTH:	LUM. WEIGHT:
REV.	DATE	BY	REMARKS	EMBED. DEPTH:	LUM. EPA:
C	10/20/14	PLF	SIZE TO "C" TOP		STATIC DEFL.:
C	10/20/14	PLF	ELIMINATE MOUNTING BOARD CHANGE COLOR	WEIGHT: N/A	TOTAL DEFL.:
				DRAWN BY: PLF	DATE: 10/20/2014

PAGE 1 OF 2

ARATHON

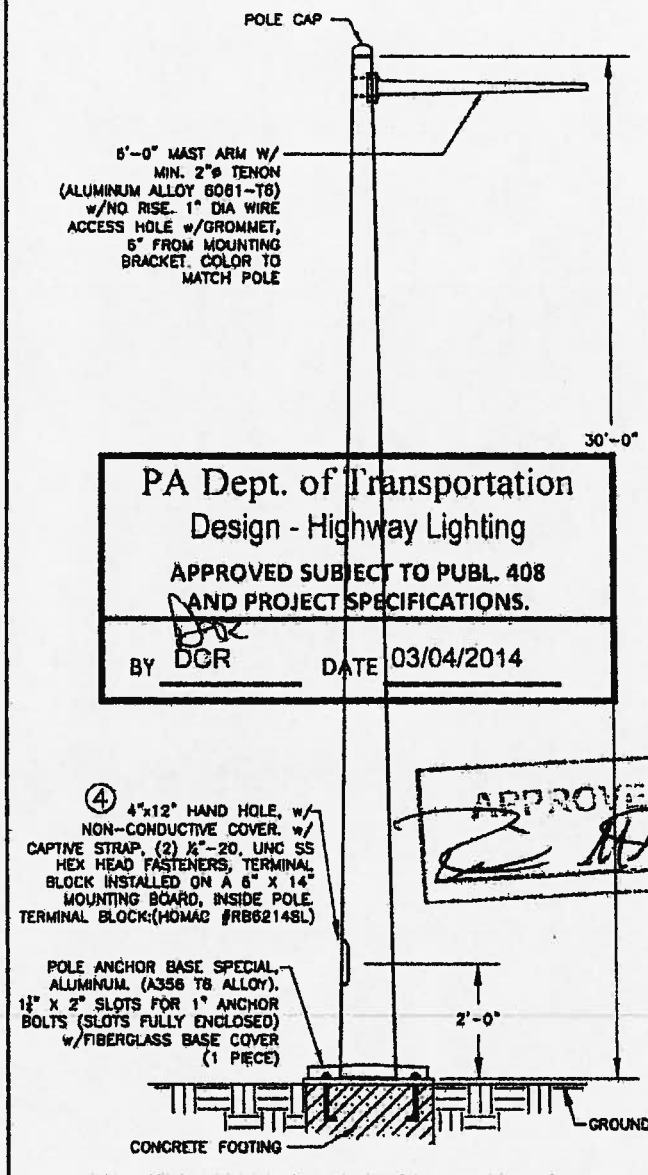

PA Dept. of Transportation
Design - Highway Lighting
APPROVED SUBJECT TO PUBL. 408 AND PROJECT SPECIFICATIONS.
BY DGR DATE 03/04/2014

APPROVED

ARM
DRILLING DETAIL

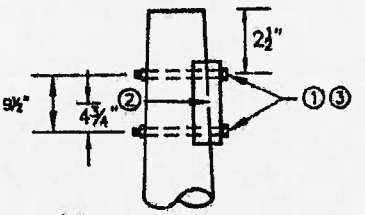

①③ ¾" DIA THRU HOLES
② 1" DIA WIRE EXIT

"POLE IS DESIGNED PER THE REQUIREMENTS SET FORTH IN 2001 AASHTO STANDARD SPECIFICATIONS FOR STRUCTURAL SUPPORT FOR HIGHWAY SIGNS, LUMINAIRES & TRAFFIC SIGNALS"

POLE STRENGTH TEST IS 1,275 LBS TRANSVERSE LOAD APPLIED 1'-0" BELOW TIP

ORIENTATION VIEWED FROM TOP OF POLE

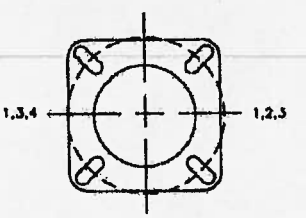

COLOR: NATIONAL PARK SERVICE BROWN RAL 7002 CMT# 68

C M T — CMT, 41 Wood Street, Estill, SC 29918, 800-116-4276, www.cmtpoles.com		CITY OF PHILADELPHIA	
		CAT#: MA30-G-50-S6-68-H-PC-TBF-BC5	
QUANTITY:	JOB NUMBER:	SPECS: ANSI C136.2	WIND VEL.: 80 @ 1.3
QUOTE#:	REF#:	TOT. LENGTH: 30'-0"	LUM. WEIGHT: N/A lbs.
REV. / DATE / BY / REMARKS		EMBED. DEPTH: N/A	LUM. EPA: 15 sq.ft.
		TIP DIA: 5.83 "	STATIC DEFL.:
		WEIGHT: 212 lbs.	TOTAL DEFL.: 10%
		DRAWN BY: PLF	DATE: 11/15/2013

PAGE 2 OF 2

DOOR DETAIL

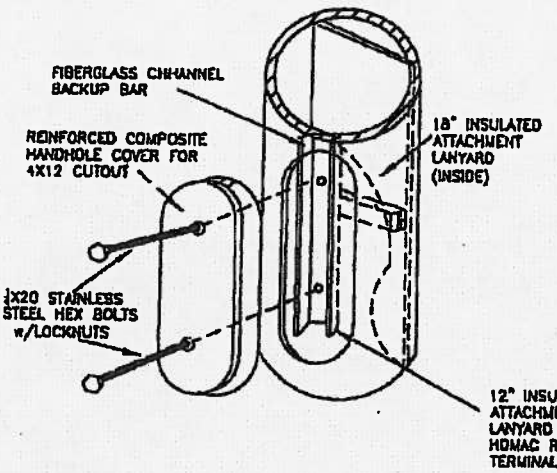

LEGACY™

PHILADELPHIA

"POLE IS DESIGNED PER THE REQUIREMENTS SET FORTH IN 2001 AASHTO STANDARD SPECIFICATIONS FOR STRUCTURAL SUPPORT FOR HIGHWAY SIGNS, LUMINAIRES & TRAFFIC SIGNALS"

ANCHOR BASE DETAIL

ANCHOR BASE
AKRON FOUNDRY
AB-10-S-MOD
SLEEVE BASE

15"NOMINAL BOLT CIRCLE

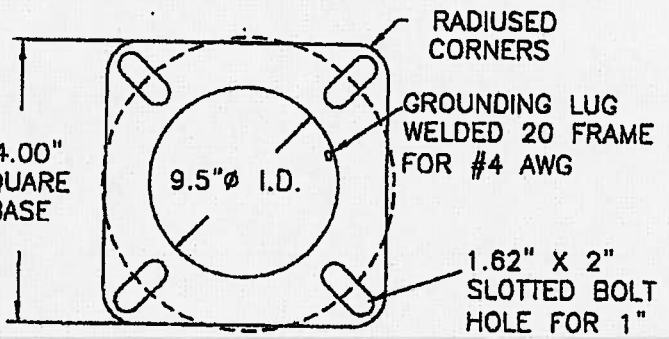

ANCHOR BASE DETAIL 356T6 CAST ALUMINUM WITH 6063-T4 TUBING

THE ALUMINUM ANCHOR BASE SHALL BE THE AKRON FOUNDRY AB10-S-MOD UNIT WHICH HAS BEEN SPECIFIED AND IS USED BY THE CITY OF PHILADELPHIA. THE ANCHOR BASE IS TO BE SECURED TO THE FIBERGLASS POLE WITH METHACRYLATE ADHESIVE DESIGNED FOR METAL TO FIBERGLASS BONDING.

C M T	CMT 41 Wood Street Estill, SC 29918 800-416-4276 www.cmtpoles.com		CITY OF PHILADELPHIA		
			CAT. NO.: MA30-G-50-S6-68-H-PC-TBF-BC5		
QUANTITY:	JOB NUMBER:		SPECS: ANSI C136.2	WIND VEL.:	
QUOTE#:	REF:		TOT. LENGTH:	LUM. WEIGHT:	
REV.	DATE	BY	REMARKS	EMBED. DEPTH:	LUM. EPA:
					STATIC DEFL.:
				WEIGHT: N/A	TOTAL DEFL.:
				DRAWN BY: PLF	DATE: 11/15/2013

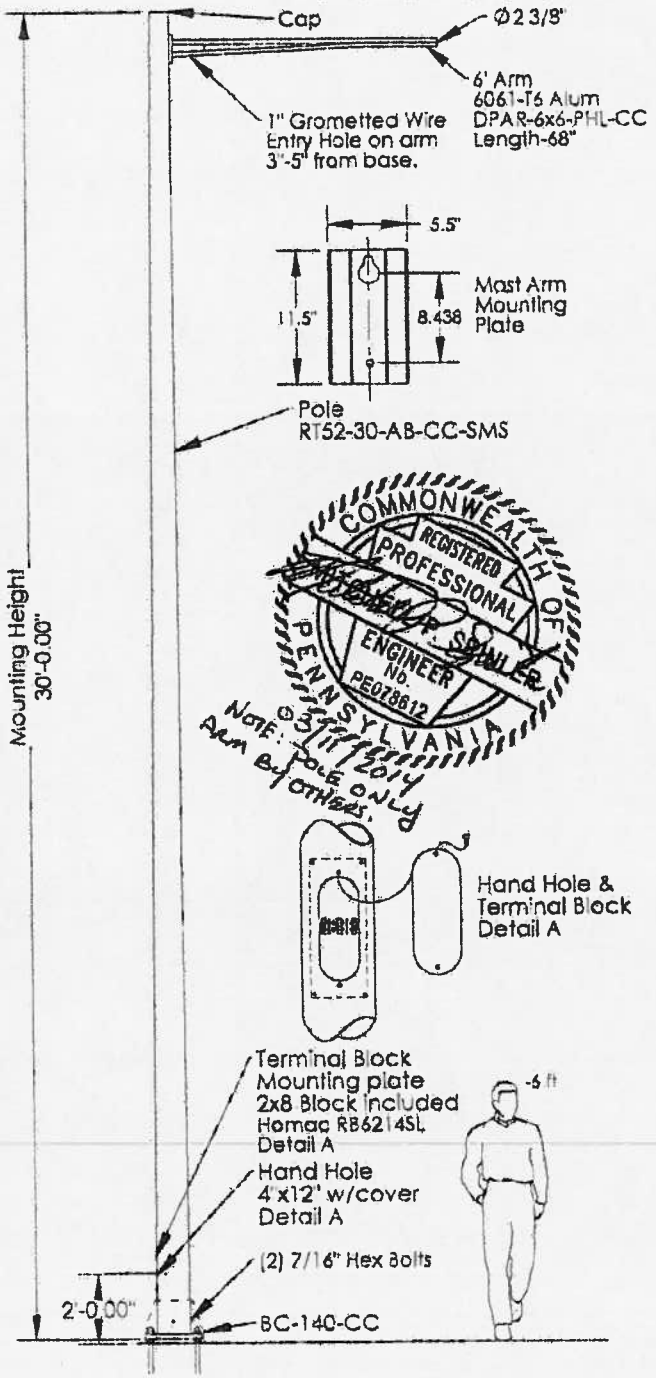

AGENCY: Illumination, Inc.
PROJECT: City of Philadelphia
QUOTE#: 170512

POLE
Model: RT52
Top Dia: 5.9"
Taper: .14"/ft
Construction: Fiberglass Composite
72% Glass 28% Epoxy Resin
Alternating 89° Hoops &
18° Helicals Top 2 ft reinforced for arm.
Anchor Base: Plate-1.25" 356T6 Alum. casting slots 1.31"x1.81" 11.0" min inside 12" Min Outside for 1" Bolts, 12" SQ.
Tube- 6063-T6 Alum
Bolt Circle: 11"-12"
Hand Hole: 4"x12" w/cover painted to match pole. 180° from arm
Cover: Non-metallic supplied with lanyard
Pole Top: Cap high impact plastic
Paint: UV & Cleaning chemical resistant
Color: National Park Service Federal Brown 20040
Options: 6"x14" Fiberglass Terminal Block Mounting Plate. 2x8 Terminal Block mounted
Weight: 187 lbs approx
MAX E.P.A. of Attachments: 13.54 @ 80 mph (2001 App C)
MAX Attachment Weight: 400 lbs ℄, 75 lbs mast arm & Fixture

BASE COVER
Model: BC-140
Style: 1-piece
Material: Fiberglass Composite
Color: CC- National Park Service Brown 20040
Weight: 10.5 lbs approx
Height: 11.5"
Width: 16.5" SQ.

NOTE: Pole may be reinforced for additional weight loads and EPA.
MAX Deflection: 15% of Pole height @ 600#
Ultimate Lateral load 1200 lbs.
Safety Factor: 2:1
Tested to C136.20 AASHTO 2001 Appendix C Specs.
EPA will decrease according to arm/fixture configuration used. Weight limit of 75 lbs for arm and fixture. Slope not to exceed 1.67°

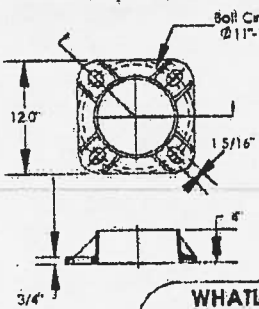

Akron Foundry
AB-8-T-MOD

Shoe base is welded to Aluminum stub by Penn Dot Bulletin 15 approved facility. Aluminum stub secured to fiberglass pole with Methacrylate adhesive designed for metal to fiberglass bonding. To further secure the base to the pole, (2) 7/16" hex bolts are used.

WHATLEY, INC. A Valmont Company
3550 Odessa Way, STE A
Aurora, CO., 80011
phone: (877) 959-7678
fax: (303) 286-7272
web: www.whatley.com

REV	DESCRIPTION	DATE
A	Changed Bolt Circle	1/28/14
B	Revised EPA	2/25/14
C	Revised Tube material	2/27/14
D	Revised EPA	3/10/14

PART NO. RT52-BC140-30-AB-CC-SMS-DTC	DESCRIPTION: Pole Assembly		
SCALE: 1:44	SIZE: A	REV: D	
MATERIAL: Noted			
FINISH: Smooth			
DO NOT SCALE DRAWING			

DOCUMENTATION	INITIAL	DATE
DRAWN	JTC	11/14/11
QUOTE REQUEST		
TOOLING REQUEST		
FIRST ARTICLE REQUEST		
FIRST ARTICLE INSPECTION		
PRODUCTION RELEASE		

UNLESS OTHERWISE NOTED:
DIMENSIONS ARE IN INCHES
TOLERANCES:
DECIMAL .XX ± .03
DECIMAL .XXX ± .010
ANGLE ± 1/2

PROPRIETARY AND CONFIDENTIAL
THE INFORMATION CONTAINED IN THIS DRAWING IS THE SOLE PROPERTY OF WHATLEY, INC. ANY REPRODUCTION IN PART OR AS A WHOLE WITHOUT THE WRITTEN PERMISSION OF WHATLEY, INC. IS PROHIBITED

WHATLEY ENGINEERING PACKAGE

AGENCY:	Illumination, Inc
PROJECT #:	170512
PROJECT NAME:	City of Philadelphia

Compiled By:
John Cannon
Engineering Dept
Whatley
3550 Odessa Way Suite A
Aurora, CO 80011
877-959-7678 X232
303-286-7216 Fax
john.cannon@valmont.com
www.whatley.com

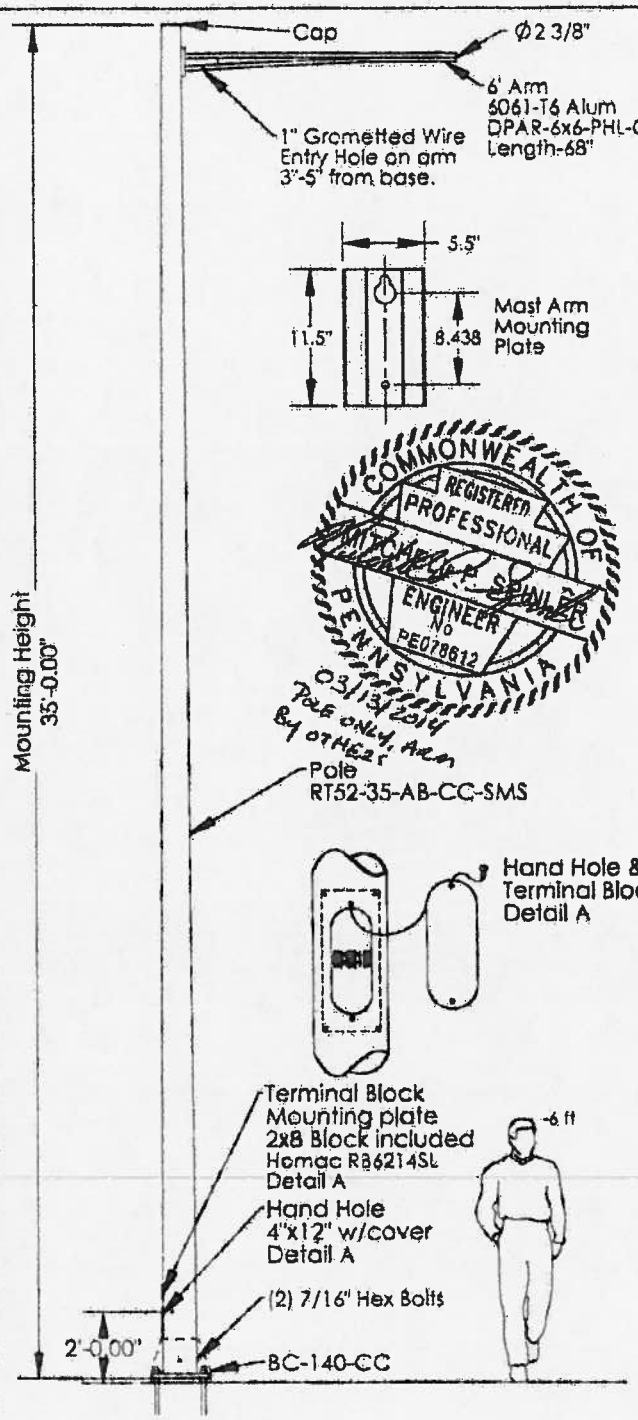

AGENCY: Illumination, Inc.
PROJECT: City of Philadelphia
QUOTE#: 170512

POLE

Model: RT52
Top Dia: 5.2"
Taper: .14"/ft
Construction: Fiberglass Composite
72% Glass 28% Epoxy Resin
Alternating 89 ° Hoops &
18 ° Helicals Top 2 ft reinforced
for arm.
Anchor Base: Plate-1.25" 356T6 Alum. casting
slots 1.62"x2" 12.75" min inside 16.75"
Min Outside for 1" Bolts, 14" SQ.
Tube- 6063-T6 Alum
Bolt Circle: 13'-16'
Hand Hole: 4"x12" w/cover painted to match pole.
180 ° from arm
Cover: Non-metallic supplied with lanyard
Pole Top: Cap high impact plastic
Paint: UV & Cleaning chemical resistant
Color: National Park Service Federal Brown 20040
Options: 6"x14" Fiberglass Terminal Block Mounting
Plate. 2x8 Terminal Block mounted
Weight: 187 lbs approx
MAX E.P.A. of Attachments: 12.50 @ 80 mph(2001 App C)
MAX Attachment Weight: 400 lbs @ , 75 lbs mast arm & Fixture

BASE COVER

Model: BC-140
Style: 1-piece
Material: Fiberglass Composite
Color: CC- National Park Service Brown 20040
Weight: 10.5 lbs approx
Height: 11.5"
Width: 16.5" SQ.

NOTE: Pole may be reinforced for additional weight loads and EPA.
MAX Deflection: 10% of Pole height @ 600#
Ultimate Lateral load 1200 lbs.
Safety Factor: 2:1
Tested to C136.20 AASHTO 2001 Appendix C Specs.
EPA will decrease according to arm/fixture configuration used. Weight limit of 75 lbs for arm and fixture. Slope not to exceed 1.67°

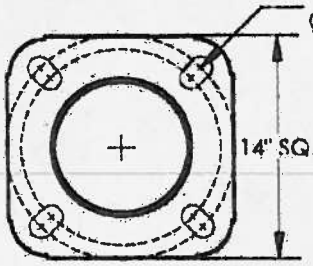

Akron Foundry
AB10-S-Mod
Anchor Base secured to fiberglass pole with Methacrylate adhesive designed for metal to fiberglass bonding. To further secure the base to the pole, (2) 7/16" hex bolts are used.

WHATLEY, INC. A Valmont Company
3550 Odessa Way, STE A
Aurora, CO., 80011
phone: (877) 959-7678
fax: (303) 286-7272
web: www.whatley.com

REV	DESCRIPTION	DATE
A	Revised EPA	2/25/14
B	Revised Top Dia & Tube Mater.	2/27/14
C	Revised EPA	2/28/14

PART NO. RT52-BC140-35-AB-CC-SMS-DTC		DESCRIPTION: Pole Assembly	
SCALE: 1:44	SIZE: A	REV. C	
MATERIAL: Noted			
FINISH: Smooth			
DO NOT SCALE DRAWING			

DOCUMENTATION	INITIAL	DATE
DRAWN	JTC	8/2/13
QUOTE REQUEST		
TOOLING REQUEST		
FIRST ARTICLE REQUEST		
FIRST ARTICLE INSPECTION		
PRODUCTION RELEASE		

UNLESS OTHERWISE NOTED:
DIMENSIONS ARE IN INCHES
TOLERANCES:
DECIMAL .XX ± .03
DECIMAL .XXX ± .010
ANGLE ± 1/2

PROPRIETARY AND CONFIDENTIAL
THE INFORMATION CONTAINED IN THIS DRAWING IS THE SOLE PROPERTY OF WHATLEY, INC. ANY REPRODUCTION IN PART OR AS A WHOLE WITHOUT THE WRITTEN PERMISSION OF WHATLEY, INC. IS PROHIBITED.

WHATLEY ENGINEERING PACKAGE

AGENCY: Illumination, Inc
PROJECT #: 170512
PROJECT NAME: City of Philadelphia

Compiled By:
John Cannon
Engineering Dept
Whatley
3550 Odessa Way Suite A
Aurora, CO 80011
877-959-7678 X232
303-286-7216 Fax
john.cannon@valmont.com
www.whatley.com

Drawing for item 2.2.1.7-CC# 31010 050 017

ANCHOR BASE POLE

APPROVAL
8-26-10

TENON 3" X 3.75 ALUMINUM

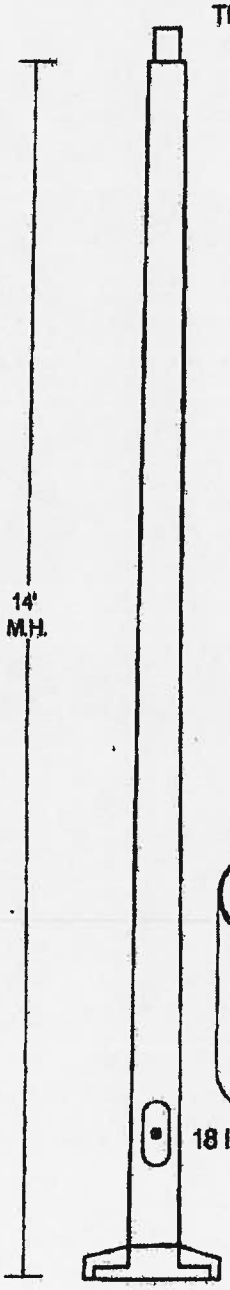

POLE SPECIFICATIONS

FILAMENT WOUND COMPOSITE SHAFT CONSISTING OF CONTINUOUS FIBERGLASS ROVING COMBINED WITH THERMOSETTING POLYESTER RESIN WOUND IN LOW ANGLE HELICALS AND HIGH ANGLE HOOPS PROVIDING FOR MAXIMUM RESISTANCE TO DEFLECTION AND SHEAR

COLOR: BRONZE RAL 7022
FINISH: SMOOTH
MAXIMUM EPA: 10 @ 80 MPH w 1.3 GUST
POLE WEIGHT : 31 LBS
POLE TIP: 3.75 INCHES NOMINAL
POLE BASE 5.25 INCHES NOMINAL

Handhole Specifications
Reinforced composite handhole cover
3" x 6" Minimum Cutout
1/4 x 20 SS hex nut w/ locknut
18" insulated attachment lanyard
non conductive backing bar

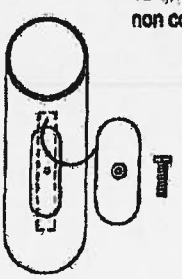

18 INCHES ABOVE GROUNDLINE

One Piece Fiberglass Base Shroud
cut out @ 5.75"

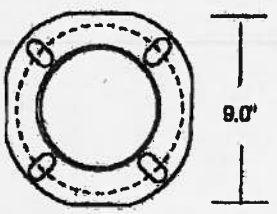

Base Specifications
356T6 cast aluminum w/ 6063 t4 tubing
.56 thick base casting 7.5" bolt circle for .75 bolts
13/16" x 1 1/8" slotted bolt holes
Akron Foundry ABS-MOD

ALLIANCE COMPOSITES

City of Philadelphia Specification rev 07/29/2010
Alliance Composites # AH14FHDS3-CPS-7.5
7.5" Anchor Base Smooth Pole with Slip Over Shroud

Drawing for Item 2.2.1.8- CC# 31010 052 040

31010 052 040

ANCHOR BASE POLE

APPROVAL
8-26-10

TENON 3" X 3.75 ALUMINUM

POLE SPECIFICATIONS

FILAMENT WOUND COMPOSITE SHAFT CONSISTING OF CONTINUOUS FIBERGLASS ROVING COMBINED WITH THERMOSETTING POLYESTER RESIN WOUND IN LOW ANGLE HELICALS AND HIGH ANGLE HOOPS PROVIDING FOR MAXIMUM RESISTANCE TO DEFLECTION AND SHEAR

COLOR: BRONZE RAL 7022
FINISH: SMOOTH
MAXIMUM EPA: 10 @ 80 MPH w 1.3 GUST
POLE WEIGHT : 38 LBS
POLE TIP: 3.75 INCHES NOMINAL
POLE BASE : 6.0 INCHES NOMINAL

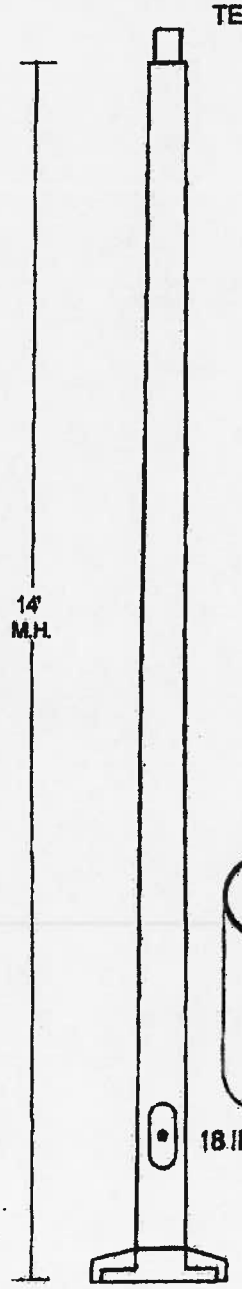

Handhole Specifications
Reinforced composite handhole cover
3" x 6" Minimum Cutout
1/4 x 20 SS hex nut w/ locknut
18" Insulated attachment lanyard
non conductive backing bar

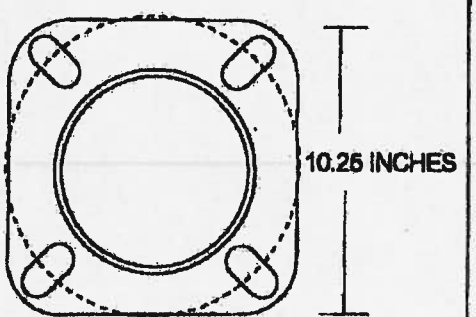

Base Specifications
356T6 cast aluminum w/ 6063 t4 tubing
.75 thick base casting 9"-11" bolt circle for 1" bolts
1.25" X 2.75" slotted bolt holes
Akron Foundry AB6-MOD

ALLIANCE COMPOSITES

City of Philadelphia Specification rev 07/29/2010
Alliance Composites # AH14FHDS3-CPS-11-1
11" Anchor Base Smooth Pole with Slip Over Shroud

Drawing for 2.2.1.9- CC# 31010 050 028

31010 050 028

APPROVAL

DIRECT BURY POLE

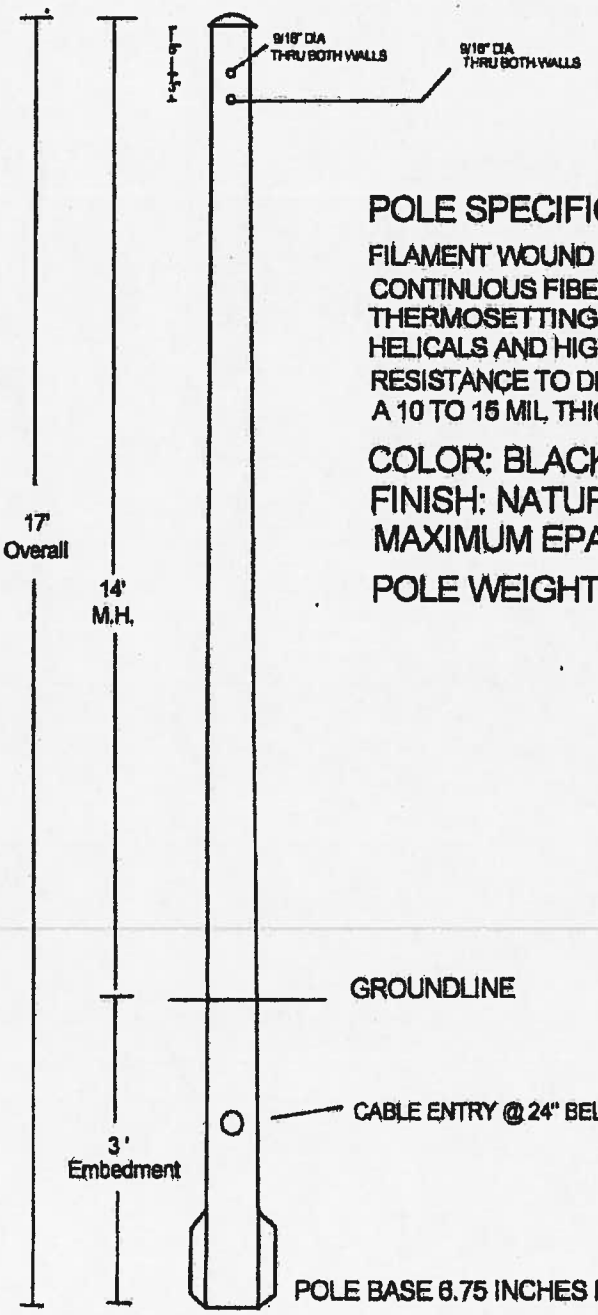

POLE SPECIFICATIONS

FILAMENT WOUND COMPOSITE SHAFT CONSISTING OF CONTINUOUS FIBERGLASS ROVING COMBINED WITH THERMOSETTING POLYESTER RESIN WOUND IN LOW ANGLE HELICALS AND HIGH ANGLE HOOPS PROVIDING FOR MAXIMUM RESISTANCE TO DEFLECTION AND SHEAR. POLE FINISH IS A 10 TO 15 MIL THICK POLYURETHANE FINISHING RESIN.

COLOR: BLACK

FINISH: NATURAL

MAXIMUM EPA: 4.3 @ 90 MPH w 1.3 GUST

POLE WEIGHT : 28 LBS

ALLIANCE COMPOSITES	City of Philadelphia Specification rev 07/29/2010 Alliance Composites # DS17ASDN1-CPS 17 ft Direct Bury Pole

Drawing for Item 2.2.1.10- CC# 31010 050 027

DIRECT BURY POLE

APPROVAL
8-26-10

TENON 3" X 3.75 ALUMINUM

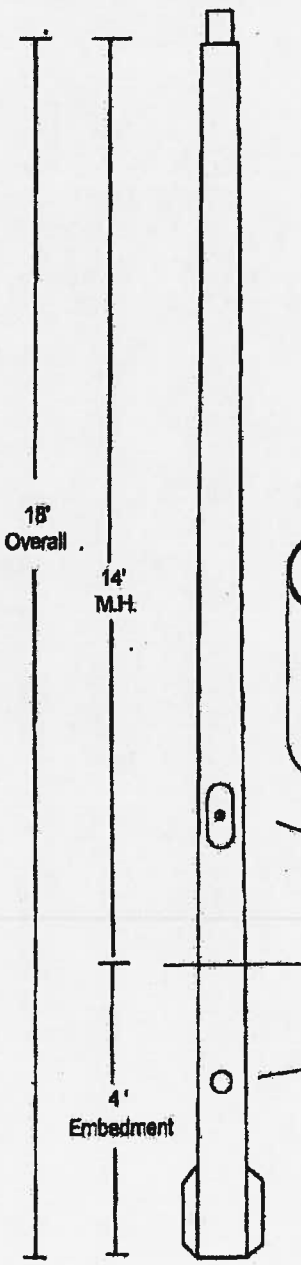

POLE SPECIFICATIONS

FILAMENT WOUND COMPOSITE SHAFT CONSISTING OF CONTINUOUS FIBERGLASS ROVING COMBINED WITH THERMOSETTING POLYESTER RESIN WOUND IN LOW ANGLE HELICALS AND HIGH ANGLE HOOPS PROVIDING FOR MAXIMUM RESISTANCE TO DEFLECTION AND SHEAR

COLOR: BRONZE RAL 7022
FINISH: SMOOTH
MAXIMUM EPA: 10 @ 80 MPH w 1.3 GUST
POLE WEIGHT : 33 LBS
POLE TIP: 3.75 INCHES NOMINAL
POLE BASE 6.25 INCHES NOMINAL

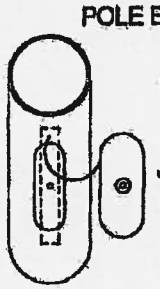

Handhole Specifications
Reinforced composite handhole cover
3" x 6" Minimum Cutout
1/4 x 20 SS hex nut w/ locknut
18" Insulated attachment lanyard
non conductive backing bar

18 INCHES ABOVE GROUNDLINE

CABLE ENTRY @ 24" BELOW GROUNDLINE

ALLIANCE COMPOSITES

City of Philadelphia Specification rev 07/29/2010
Alliance Composites # DH18FHDS3-CPS
18 ft Direct Bury Pole

31010 050 027

Drawing for Item 2.2.1.11- CC# 31010 052 041

DIRECT BURY POLE

APPROVAL
8-26-10

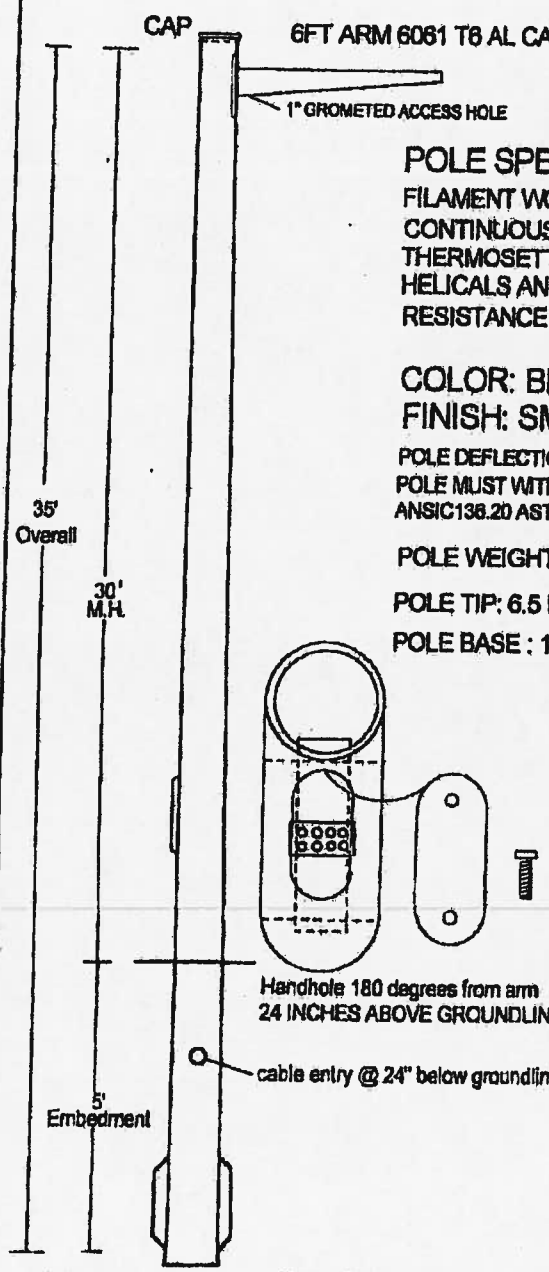

POLE SPECIFICATIONS

FILAMENT WOUND COMPOSITE SHAFT CONSISTING OF CONTINUOUS FIBERGLASS ROVING COMBINED WITH THERMOSETTING POLYESTER RESIN WOUND IN LOW ANGLE HELICALS AND HIGH ANGLE HOOPS PROVIDING FOR MAXIMUM RESISTANCE TO DEFLECTION AND SHEAR

COLOR: BRONZE RAL 7022
FINISH: SMOOTH

POLE DEFLECTION @ 36" 500# OR GREATER
POLE MUST WITHSTANDTOTAL LOAD OF 1000# WITHOUT FAILURE
ANSIC136.20 ASTM4923 CLASS 1 AASHTO LTS-2-1994

POLE WEIGHT : 140 LBS

POLE TIP: 6.5 INCHES NOMINAL

POLE BASE : 12.5 INCHES NOMINAL

Handhole Specifications

Reinforced composite handhole cover
4" x 12" Minimum Cutout
(2) 1/4 x 20 SS hex nut w/ locknut
18" Insulated attachment lanyard
non conductive backing bar
Homac RB6214SL Terminal Block
mounted on 8 x 14 fiberglass board

ALLIANCE COMPOSITES

City of Philadelphia Specification rev 07/29/2010
Alliance Composites # DH35FHDS-CPS-15
35ft Direct Bury Smooth Pole

31010 052 041

Drawing for Item 2.2.2- CC# 31010 052 031

Drawing for Item 2.2.3- CC# 31051 003 005

hapco

4 Bolt Base

RSA16D6-4-

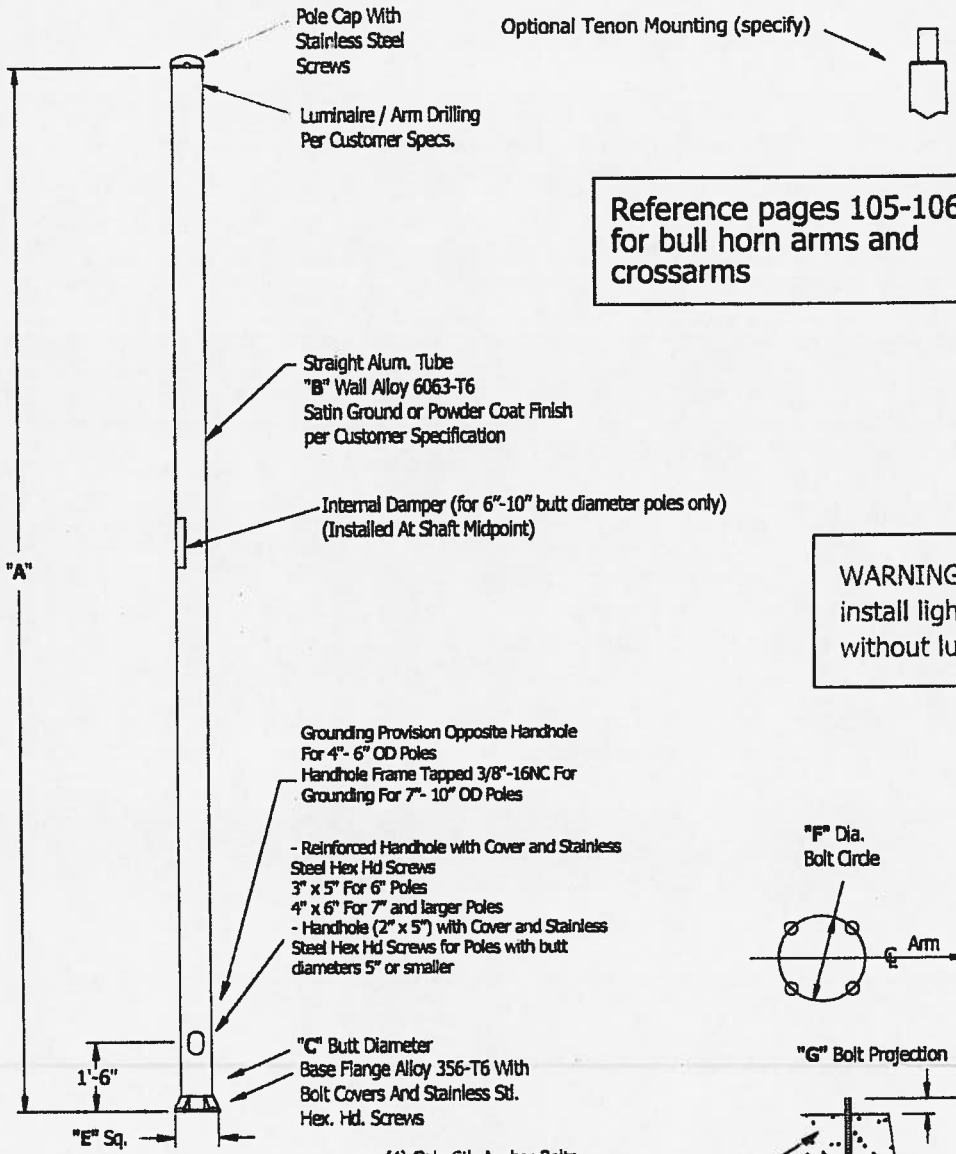

Reference pages 105-106 for bull horn arms and crossarms

WARNING: Do not install light pole without luminaire.

Mounting Height:	16 ft
Wall Thickness:	.188 in
Butt Diameter:	6 in
Top Diameter:	6 in
Base Diameter:	9.75 in
Bolt Circle:	9-10 in
Bolt Projection:	2.75 in
Bolt Size:	.75 x 30 x 3
Net Weight:	38
Luminary Weight:	100
Arm Length:	
Quantity:	

Maximum EPA

70:	23.8
80:	17.9
90:	14.0
100:	11.2
110:	9.1

Accessories

Your Name:	
Representative Name:	
Architect Name:	
Project Name:	
Customer P.O. #:	
Finish:	-
Date:	11/09/2015
Notes:	

Drawing for Item 2.2.10- CC# 31010 052 028

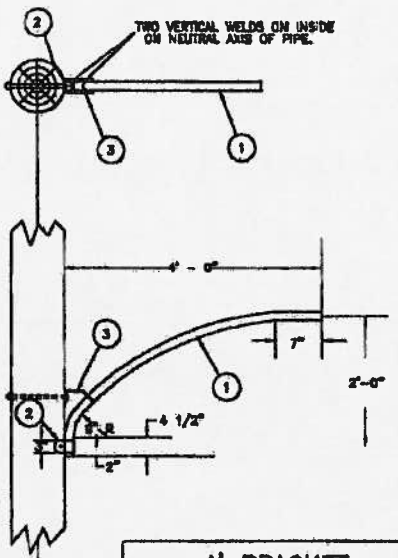

4' BRACKET

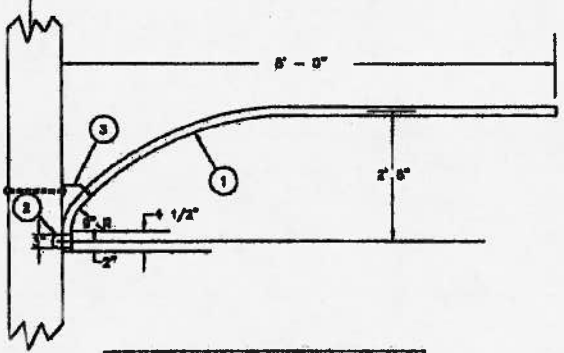

8' BRACKET

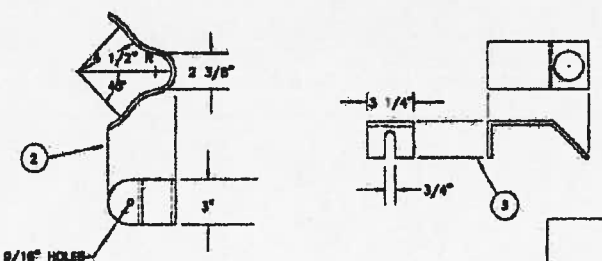

NOTE:
CONTRACTOR SHALL PROVIDE A MOUNTING SKETCH TO THE STREET LIGHTING ENGINEER PRIOR TO INSTALLATION

MATERIAL—ALUMINUM,STEEL

PIECE	SIZE	ALLOY OR FINISH
1	2" PIPE I.P.S.	6063 – T6 SCH 40
2	1/4" X 3"	6063 – T6
3	1/4" X 3 1/4"	6063 – T6

CITY OF PHILADELPHIA
DEPARTMENT OF STREETS

STREET LIGHT DAVIT

DATE	11/10/05		
DRAWN	S.L.N.		
CHECKED	E.G.B.	SHEET 1 OF 2	

SL0520

31010 052 028

Drawing for Items 2.2.11 to 2.2.21- CC# 31010 052 042, 31010 052 043, 31010 052 044, 31010 052 045, 31010 052 046, 31010 052 047, 31010 052 048, 31010 052 049, 31010 052 057, 31010 052 058, & 31010 052 059. Page 1 of 3

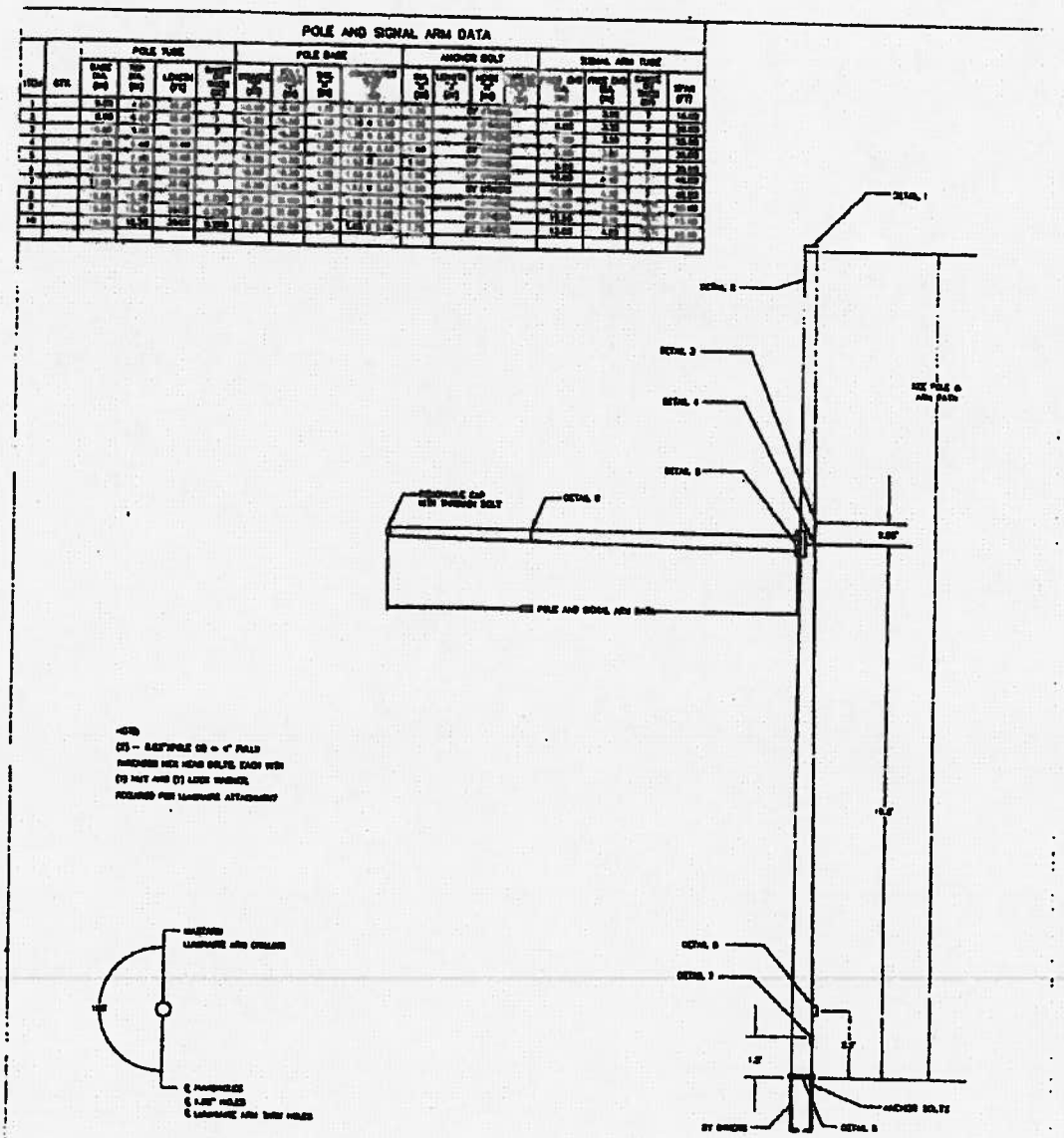

CITY OF PHILADELPHIA
DEPARTMENT OF STREETS

MAST ARM

DATE	01/08/05			TE0510
DRAWN	S.L.H.			
CHECKED	E.G.B.	SHEET 1 OF 3		

31010 052 042	See Para. 2.2.16
31010 052 043	See Para. 2.2.17
31010 052 044	See Para. 2.2.18
31010 052 045	See Para. 2.2.19
31010 052 046	See Para. 2.2.20
31010 052 047	See Para. 2.2.21
31010 052 048	See Para. 2.2.22
31010 052 049	See Para. 2.2.23
31010 052 057	See Para. 2.2.24
31010 052 058	See Para. 2.2.25

Drawing for Items 2.2.11 to 2.2.21- CC# 31010 052 042, 31010 052 043, 31010 052 044, 31010 052 045, 31010 052 046, 31010 052 047, 31010 052 048, 31010 052 049, 31010 052 057, 31010 052 058, & 31010 052 059. Page 2 of 3

31010 052 043	See Para. 2.2.17
31010 052 044	See Para. 2.2.18
31010 052 045	See Para. 2.2.19
31010 052 046	See Para. 2.2.20
31010 052 047	See Para. 2.2.21
31010 052 048	See Para. 2.2.22
31010 052 049	See Para. 2.2.23
31010 052 057	See Para. 2.2.24
31010 052 058	See Para. 2.2.25
31010 052 059	See Para. 2.2.26

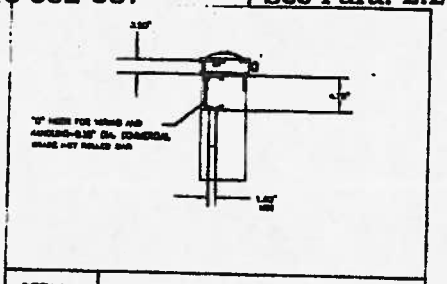

DETAIL 1 | POLE TOP

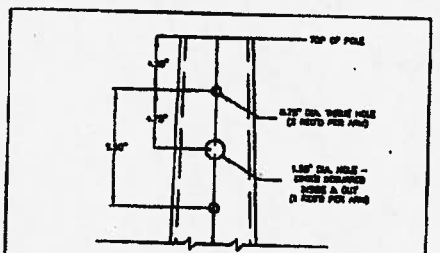

DETAIL 2 | LUMINAIRE DRILLING

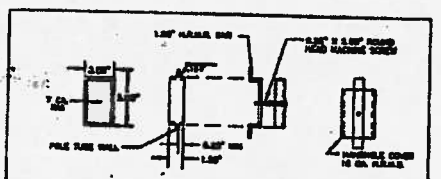

DETAIL 3 | EXTENSION HANDHOLE

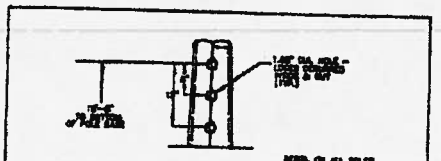

DETAIL 4 | DRILLING PATTERN

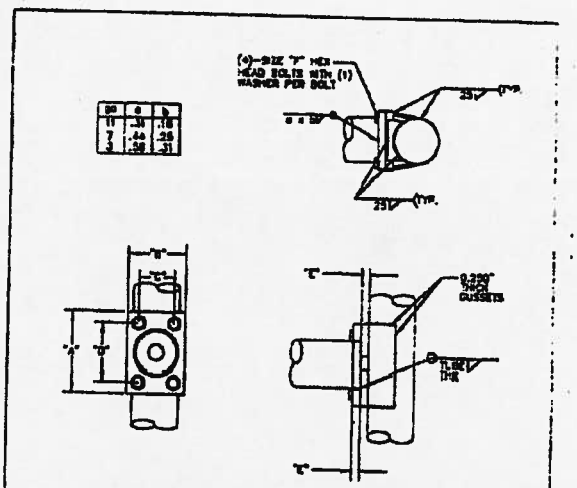

DETAIL 5 | SIGNAL ARM ATTACHMENT

SIGNAL ARM ATTACHMENT DATA

POLE BASE DIA.	"A"	"B"	"C"	"D"	"E"	"F"
9.00"	10.63"	7.75"	4.75"	7.63"	1.00"	1.00" X 2.25"
10.00"	11.25"	8.75"	5.75"	8.25"	1.00"	1.00" X 2.25"
11.00"	11.75"	9.75"	6.75"	8.75"	1.25"	1.25" X 3.25"
12.00"	12.25"	10.75"	7.75	9.25"	1.25"	1.25" X 3.25"
12.50"	13.25"	12.00"	9.00"	10.25"	1.50"	1.25" X 3.25"
13.00"	16.25"	15.00"	11.00"	12.25"	1.50"	1.50" X 3.50"
13.50"	17.75"	17.00"	13.00"	13.50"	2.00"	1.50" X 4.25"

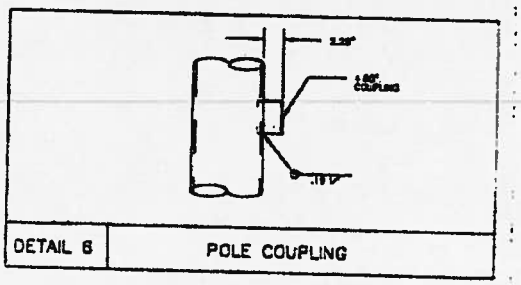

DETAIL 6 | POLE COUPLING

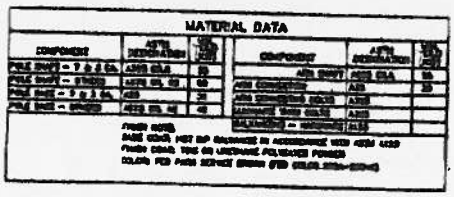

MATERIAL DATA

CITY OF PHILADELPHIA
DEPARTMENT OF STREETS

MAST ARM

DATE	01/08/09		
DRAWN	R.L.M.		
CHECKED	E.G.B.	SHEET 2 OF 3	TE0510

Drawing for Items 2.2.11 to 2.2.21- CC# 31010 052 042, 31010 052 043, 31010 052 044, 31010 052 045, 31010 052 046, 31010 052 047, 31010 052 048, 31010 052 049, 31010 052 057, 31010 052 058, & 31010 052 059. Page 3 of 3

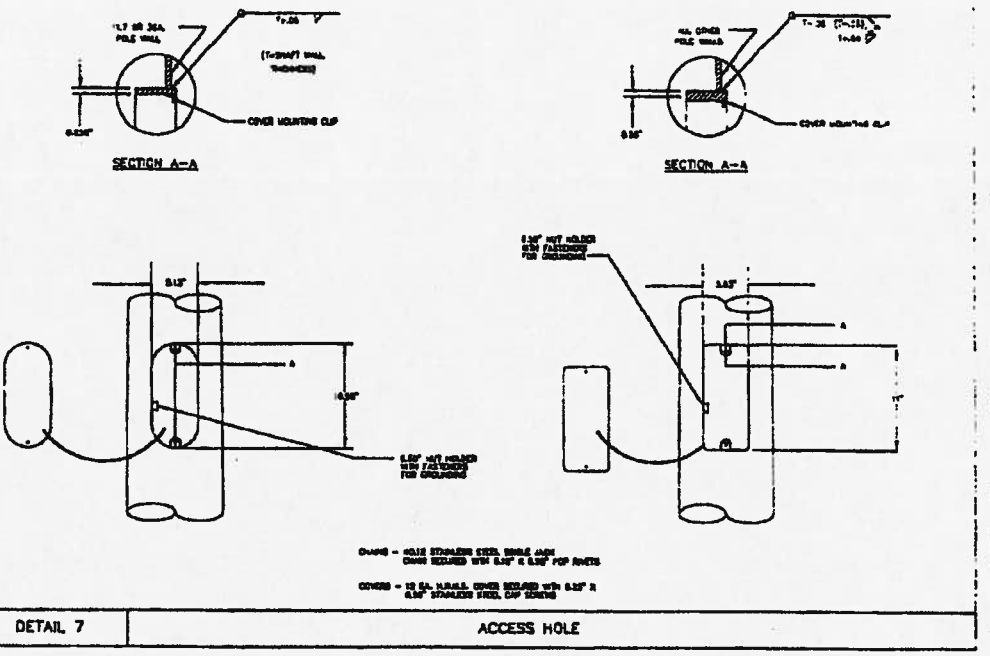

DETAIL 7 | ACCESS HOLE

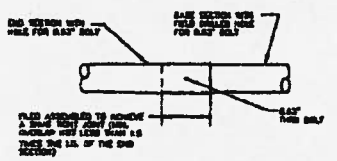

ARM SECTION DATA				
ITEM	BASE SECTION		END SECTION	
	LENGTH	GAUGE	LENGTH	GAUGE
50.00' ARM	30.00'	3	23.13'	7
55.00' ARM	30.00'	3	27.19'	7
60.00' ARM	30.00'	3	33.25'	7

DETAIL 9 | SIGNAL ARM SLIP JOINT

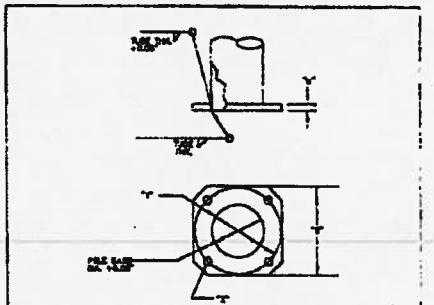

DETAIL 8 | POLE BASE

CITY OF PHILADELPHIA
DEPARTMENT OF STREETS

MAST ARM

DATE	11/08/05			TE0510
DRAWN	S.L.M.			
CHECKED	E.G.B.	SHEET 3 OF 3		

31010 052 042	See Para. 2.2.16
31010 052 043	See Para. 2.2.17
31010 052 044	See Para. 2.2.18
31010 052 045	See Para. 2.2.19
31010 052 046	See Para. 2.2.20
31010 052 047	See Para. 2.2.21
31010 052 048	See Para. 2.2.22
31010 052 049	See Para. 2.2.23
31010 052 057	See Para. 2.2.24
31010 052 058	See Para. 2.2.25
31010 052 059	See Para. 2.2.26

Drawing for Item 2.2.22- CC# 31010 052 120 page 1 of 2

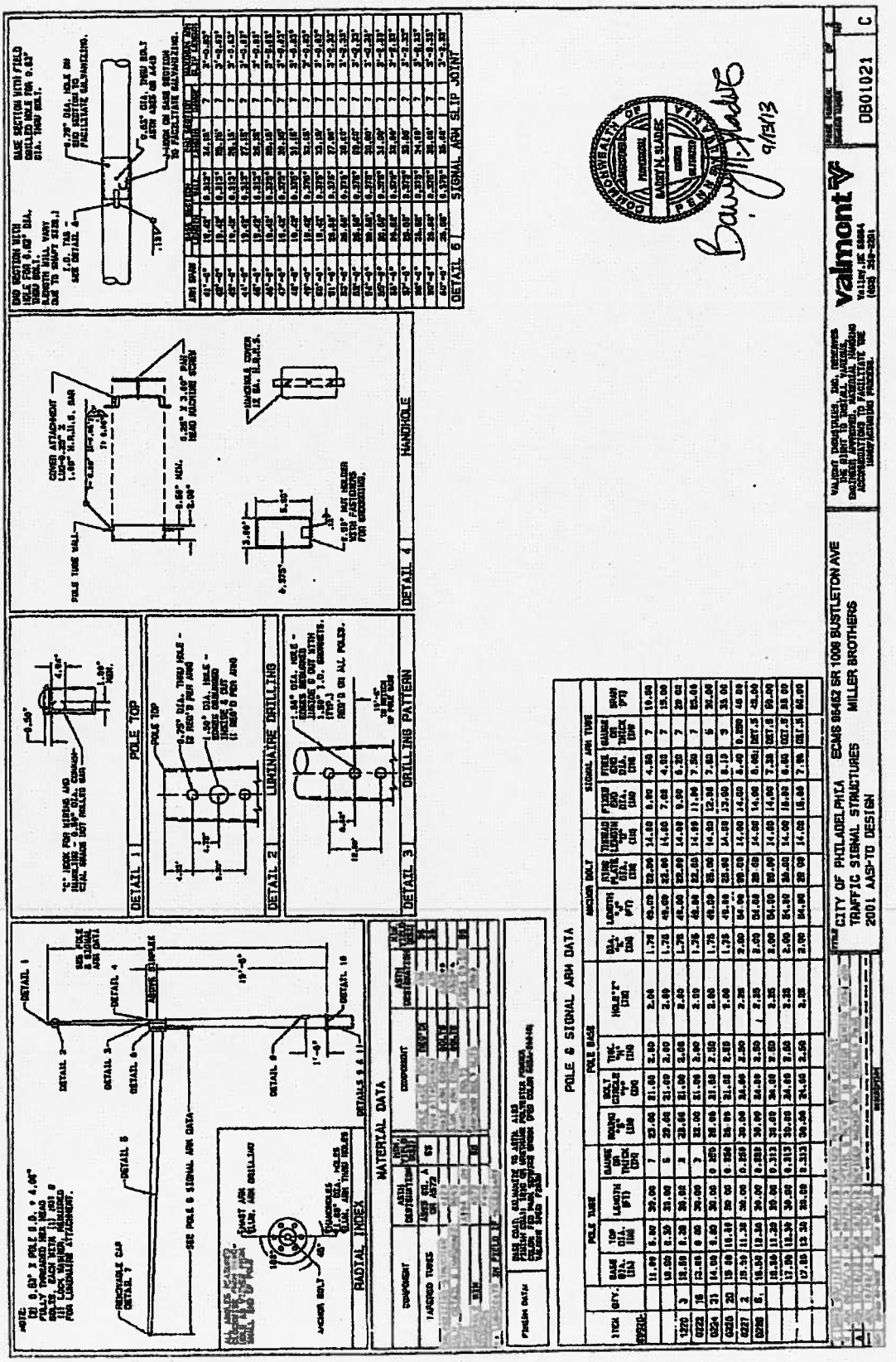

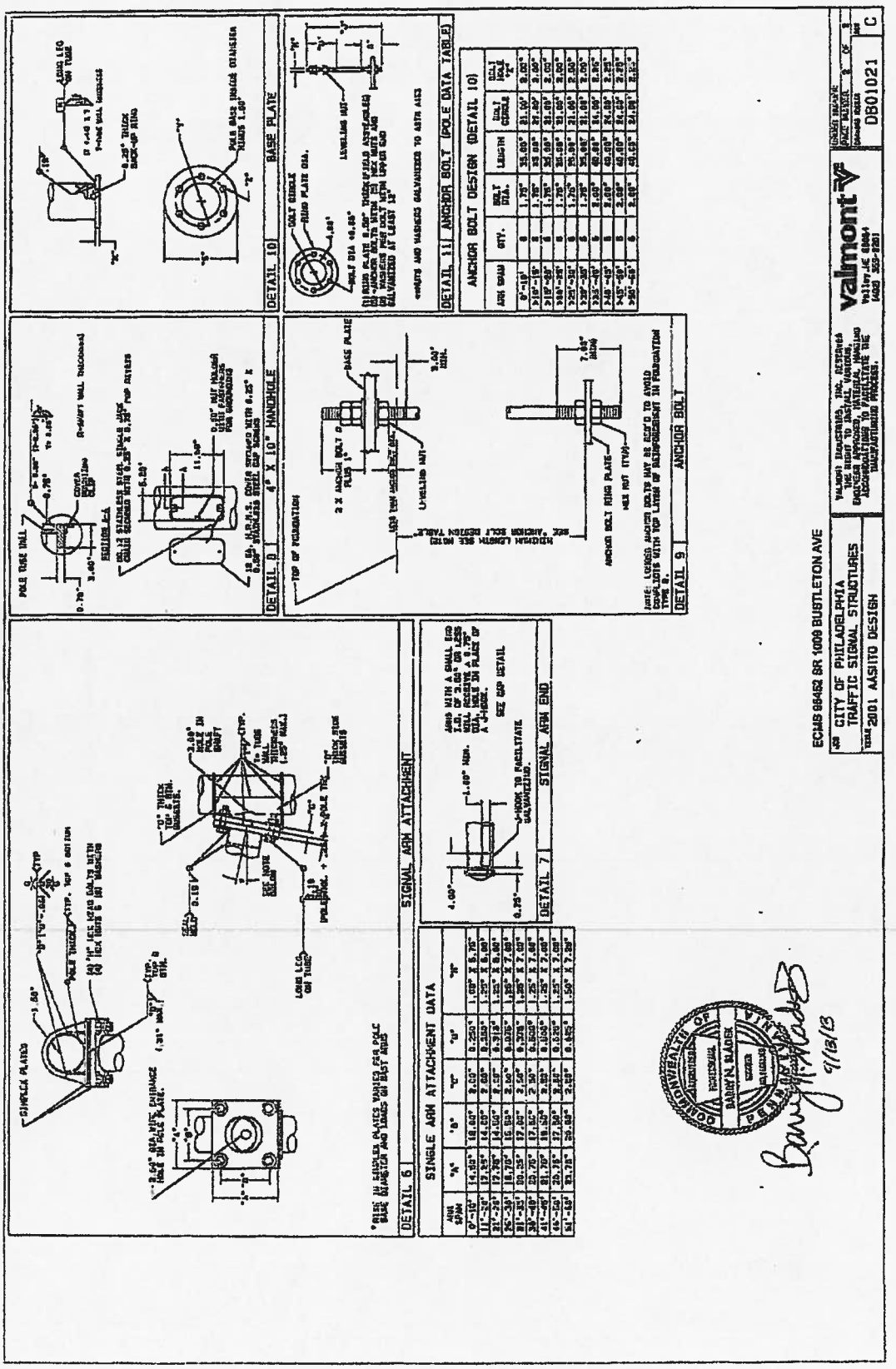
DETAIL 6
SIGNAL ARM ATTACHMENT
SINGLE ARM ATTACHMENT DATA
DETAIL 7
SIGNAL ARM END
DETAIL 8
4' X 10' HANDHOLE
DETAIL 9
ANCHOR BOLT
DETAIL 10
BASE PLATE
DETAIL 11
ANCHOR BOLT (POLE DATA TABLE)
ANCHOR BOLT DESIGN (DETAIL 10)
ECMS 98462 SR 1009 BUSTLETON AVE
CITY OF PHILADELPHIA
TRAFFIC SIGNAL STRUCTURES
2001 AASHTO DESIGN
valmont
DB01021

Drawing for Item 2.2.23- CC&# 31051 000 000

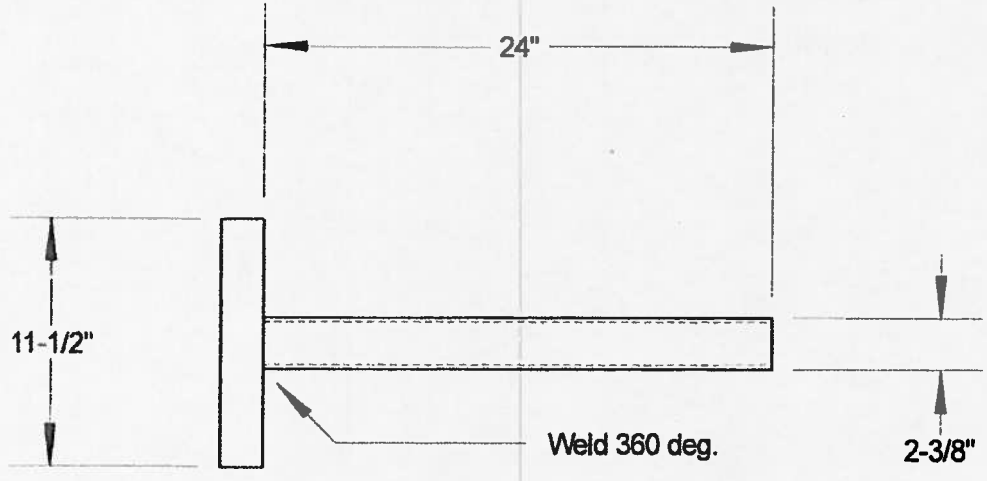

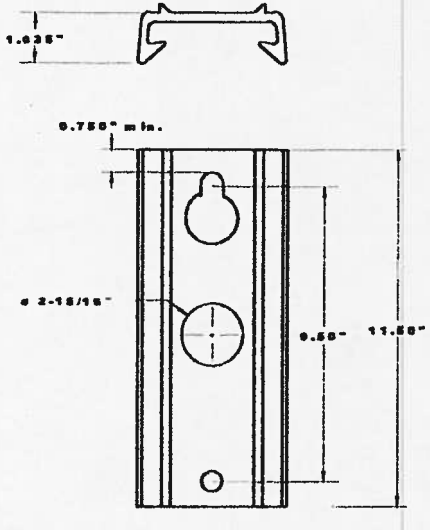

Curlee

Part number: U2002400G-PBZ
Powder coated finish to match
FED color 20040

All materials are 6063-T6
Aluminum extrusions

Drawing for Item 2.2.24-CC# 31051 000 001

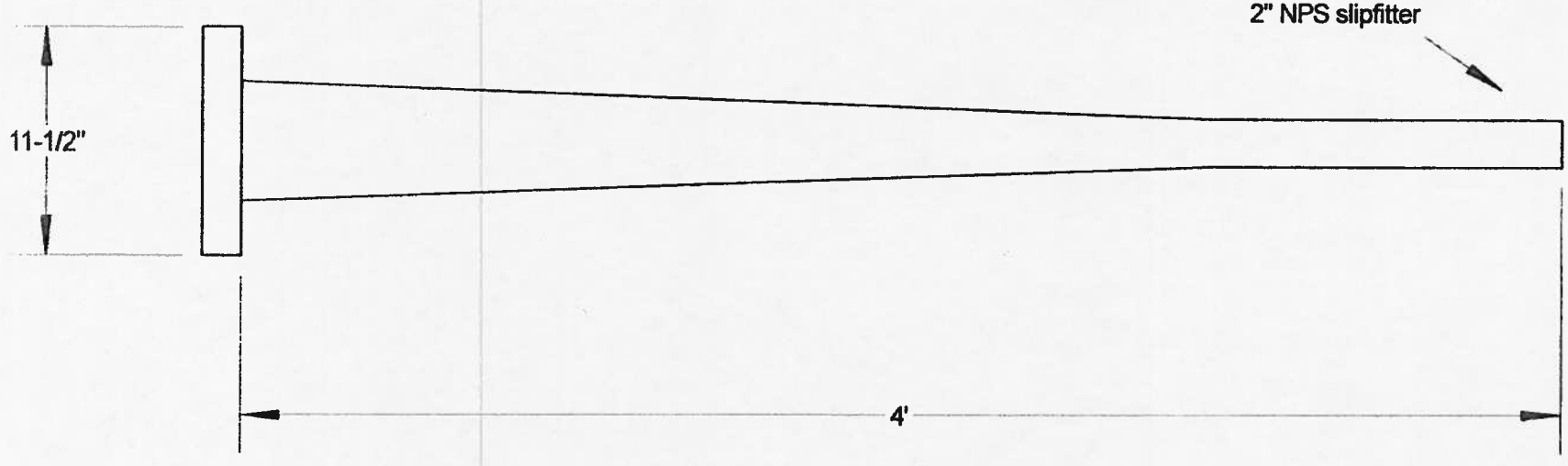

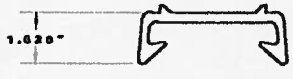

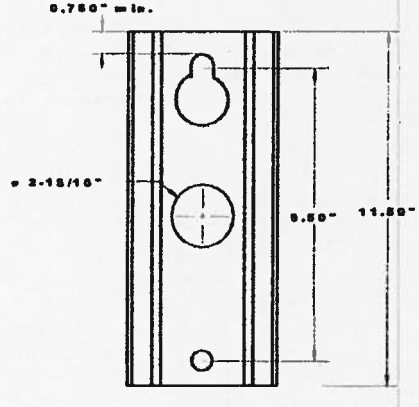

Curlee

Part number: U2004500T-PBZ
Powder coated finish to match
FED color 20040

Drawing for Item 2.2.25- CC# 31051 000 001 00

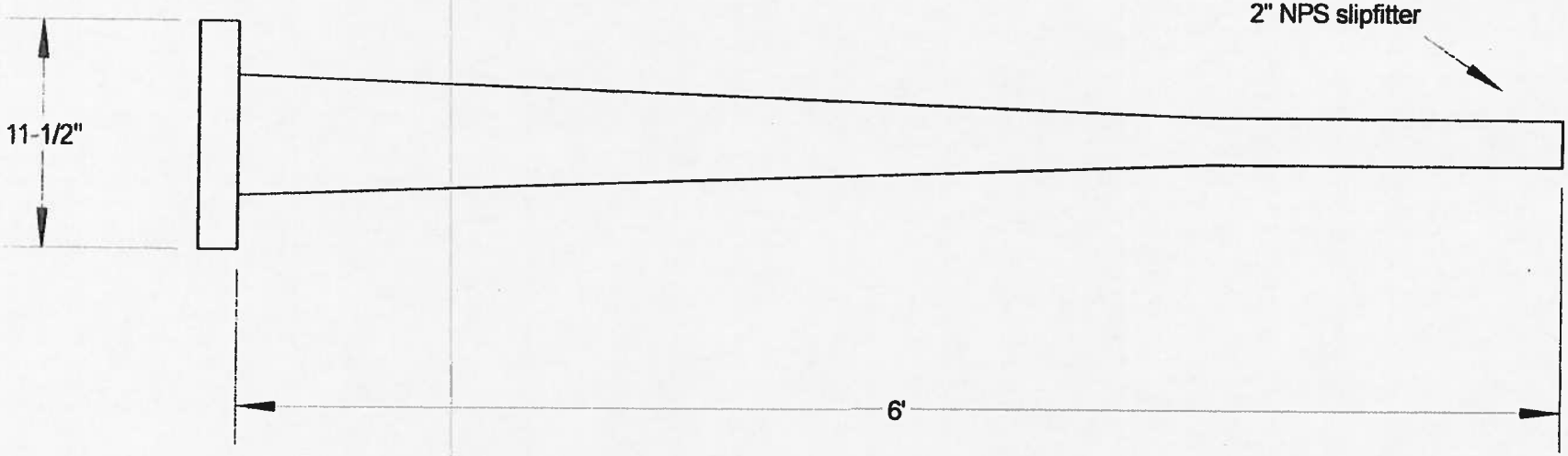

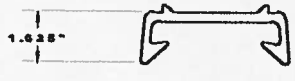

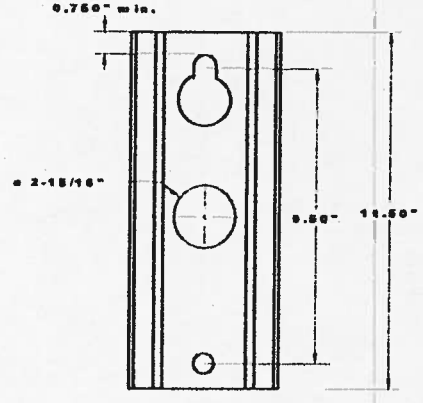

Curlee

Part number: U2006800T-PBZ
Powder coated finish to match
FED color 20040

Drawing for Item 2.2.26- CC# 31051 000 001 01

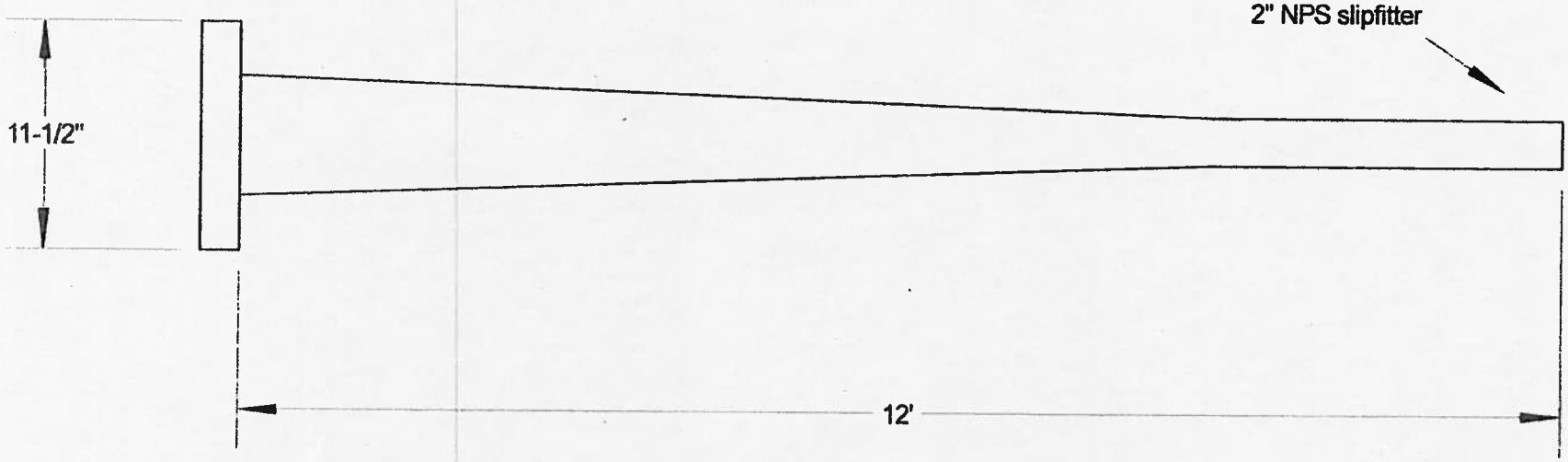

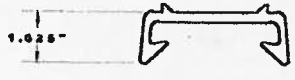

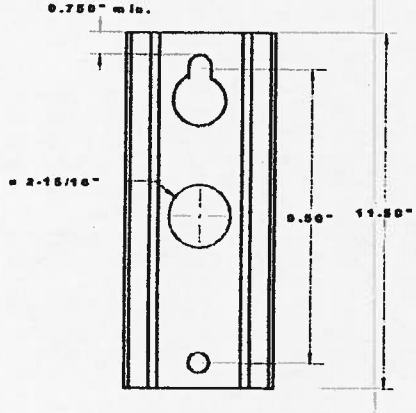

Curlee

Part number: U20013800T-PBZ
Powder coated finish to match
FED color 20040

Drawing for Item 2.2.27- CC# 31010 052 101

This drawing is property of Spring City Elect. Mfg. and is issued to the recipient with the understanding that it shall not be copied, duplicated, passed on to unauthorized parties, nor used for any purpose other than that for which it is specifically furnished except with Spring City's written permission.

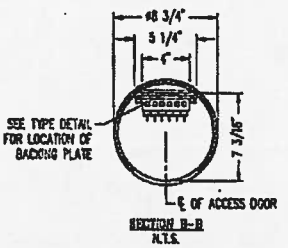

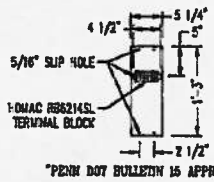

LAMP POST SPECIFICATIONS:

STYLE:	CENTER CITY
HEIGHT:	14'-0"
BASE:	18" DIAMETER
MATERIAL:	
SHAFT:	3 1/2" SCH-40 ALUMINUM PIPE (4" OD) 6061-T6
BASE:	CAST ALUMINUM ALLOY ANSI 356 PER A.S.T.M. B26-95
FINISH:	PRIME PAINT THEN FINISH PAINT, SHERWIN WILLIAMS ACROLON - CITYSCAPE GREEN (MAS #438)
ACCESS DOOR:	RECESSED NON-METALLIC - LOCATED IN BASE SECURED WITH HEX HEAD BOLTS
GROUND STUD PROVISIONS:	DRILL AND TAP BASE PLATE OPPOSITE ACCESS DOOR TO ACCOMMODATE A 1/4"-20 GROUND LUG (GROUND STUD SUPPLIED BY SPRING CITY)
ANCHOR BOLTS:	(4) 1" DIA. X 36" LONG + 4" HOOK (FULLY GALVANIZED WITH 1 NUT AND 1 WASHER PER BOLT)
BOLT PROJECTION:	3" REQUIRED
CATALOG NO.	APSCTR-18-14.00-S3-136/14#-CW

QUANTITY ..... 16 REQUIRED
PER S.O. #: 015958

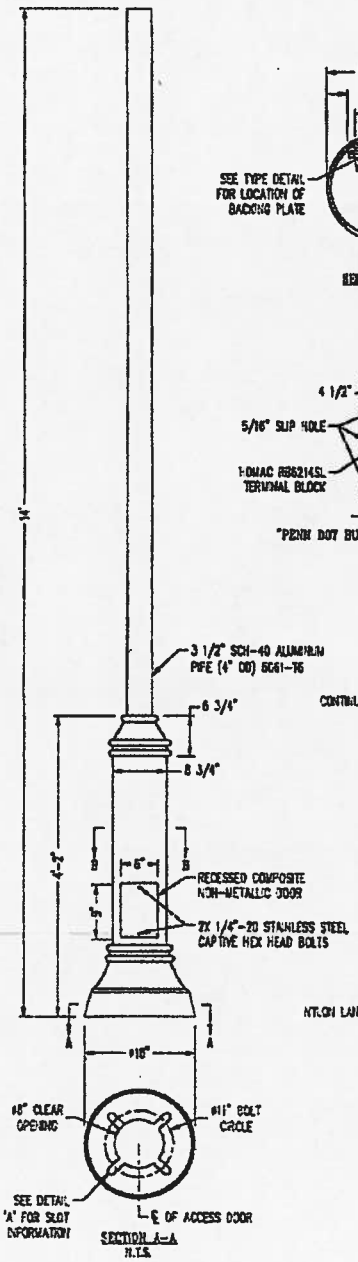

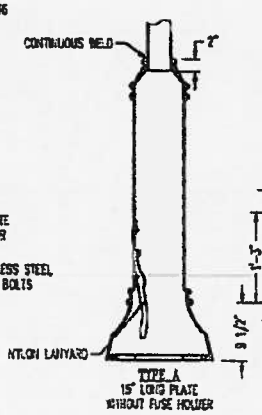

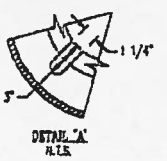

Spring City Electrical Mfg. Co.
MAIN AND MAIN STREETS - P.O. BOX 13 - SPRING CITY, PA. 19475
PHONE (610) 948-4300 - FAX (610) 948-5577 - WWW.SPRINGCITY.COM

DESCRIPTION	CITY OF PHILADELPHIA CCD LAMP POST
CUSTOMER / JOB	RUMSEY ELECTRIC PHILADELPHIA, PA CCD

SCALE	DRAWN BY:	DATE	DRAWING NO.
N.T.S.	D.A.C.	09-24-14	LP-28953

LEGACY™

PHILADELPHIA

"POLE IS DESIGNED PER THE REQUIREMENTS SET FORTH IN 2001 AASHTO STANDARD SPECIFICATIONS FOR STRUCTURAL SUPPORT FOR HIGHWAY SIGNS, LUMINAIRES & TRAFFIC SIGNALS"

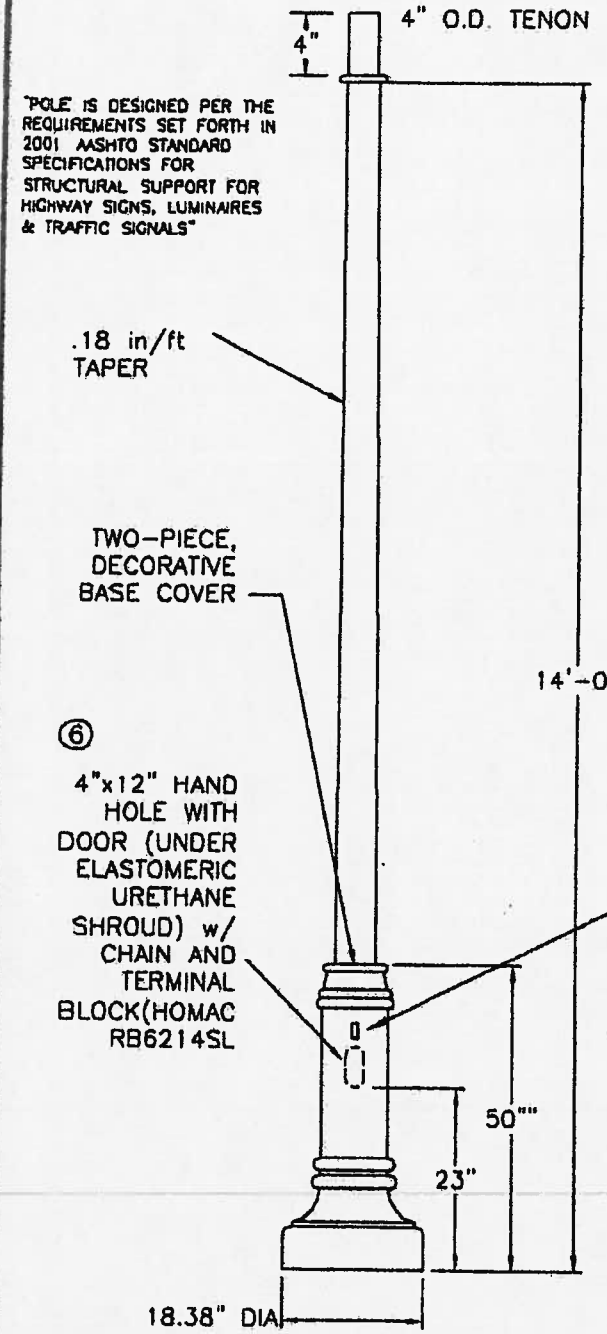

ORIENTATION VIEWED FROM TOP OF POLE

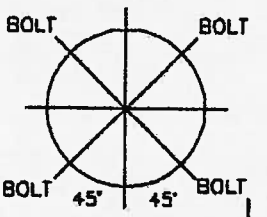

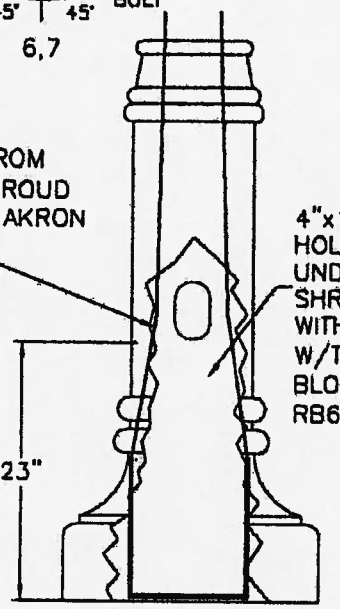

SHROUD DETAIL

⑦ NAMEPLATE 36" FROM BUTT TO INCLUDE:
1. MFG NAME
2. DATE OF MFG
3. LENGTH OF POLE

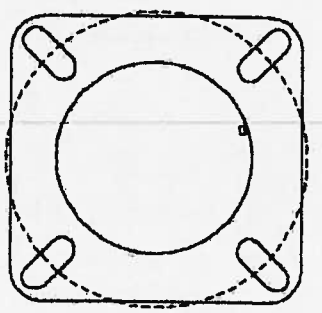

BASE PLATE

12.00" SQUARE ANCHOR BASE

NOTES:
- 11" BOLT CIRCLE
- ACCEPTS 1" BOLTS
- MIN. 7" DIAMETER CONDUIT ENTRY

THE ALUMINUM ANCHOR BASE SHALL BE THE AKRON FOUNDRY A18-S-MOD(8-1992) UNIT WHICH HAS BEEN SPECIFIED AND IS USED BY THE CITY OF PHILADELPHIA. THE ANCHOR BASE IS TO BE SECURED TO THE FIBERGLASS POLE WITH METHACRYLATE ADHESIVE DESIGNED FOR METAL TO FIBERGLASS BONDING.

COLOR: CITY SCAPE GREEN
FINISH: TEXTURED

CMT by valmont
CMT
145 Wood Street
Estill, SC 29918
800-416-4276
www.cmtpoles.com

QUANTITY:
JOB NUMBER:
QUOTE#:
REF:

REV.	DATE	BY	REMARKS
C	10/30/2014	PLF	CHANGE DOOR LOCATION

PHILADELPHIA	
CAT. NO.: LPH(W)A14-T-55-T400-S	
SPECS: AASHTO 2001	WIND VEL.: 100 @ 1.3
TOT. LENGTH: 14'-0"	LUM. WEIGHT: 50 lb
EMBED. DEPTH: 0'-0"	LUM. EPA: 8.00 sq.ft.
TIP DIA: 3.90"	STATIC DEFL:
WEIGHT: 85 lbs	TOTAL DEFL:
DRAWN BY: PLF	DATE: 02/25/2015

DOOR DETAIL

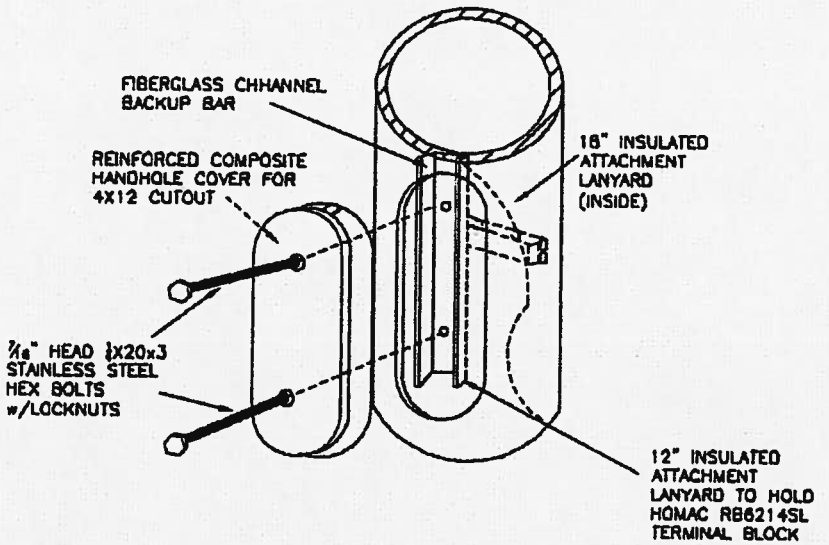

PHILADELPHIA

"POLE IS DESIGNED PER THE REQUIREMENTS SET FORTH IN 2001 AASHTO STANDARD SPECIFICATIONS FOR STRUCTURAL SUPPORT FOR HIGHWAY SIGNS, LUMINAIRES & TRAFFIC SIGNALS"

ANCHOR BASE DETAIL

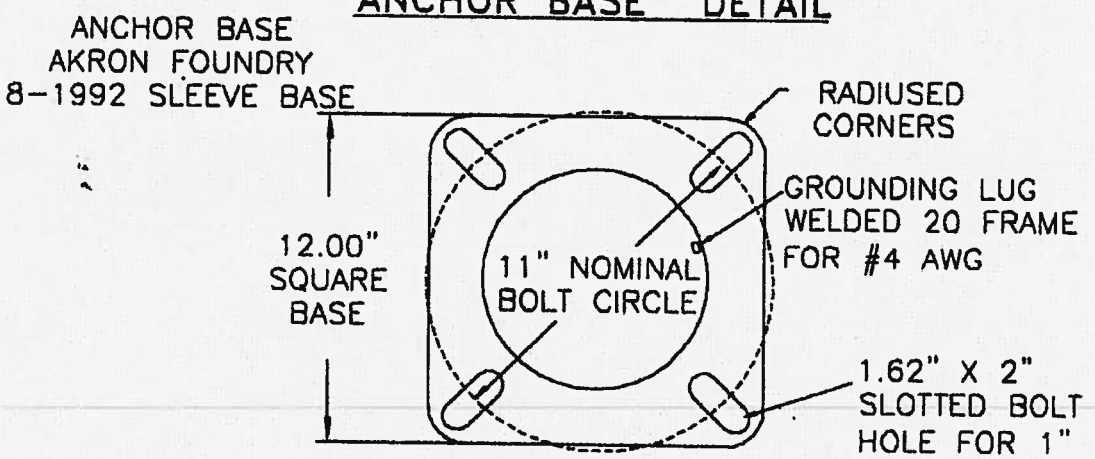

ANCHOR BASE DETAIL 356T6 CAST ALUMINUM WITH 6063-T4 TUBING

THE ALUMINUM ANCHOR BASE SHALL BE THE AKRON FOUNDRY A18-S-MOD(8-1992) UNIT WHICH HAS BEEN SPECIFIED AND IS USED BY THE CITY OF PHILADELPHIA. THE ANCHOR BASE IS TO BE SECURED TO THE FIBERGLASS POLE WITH METHACRYLATE ADHESIVE DESIGNED FOR METAL TO FIBERGLASS BONDING.

CMT
by valmont
CMT
145 Wood Street
Enoll, SC 29918
800-416-4276
www.cmtpoles.com

REV	DATE	BY	REMARKS
C	2/06/2014	PLF	CHANGE DOOR LOCATION

QUANTITY: JOB NUMBER:
QUOTE#: REF:

PHILADELPHIA

CAT. NO.: HAND HOLE & ANCHOR BASE DETAIL	
SPECS: AASHTO 2001	WIND VEL.:
TOT. LENGTH:	LUM. WEIGHT:
EMBED. DEPTH:	LUM. EPA:
	STATIC DEFL.:
WEIGHT: N/A	TOTAL DEFL.:
DRAWN BY: PLF	DATE: 02/25/2015

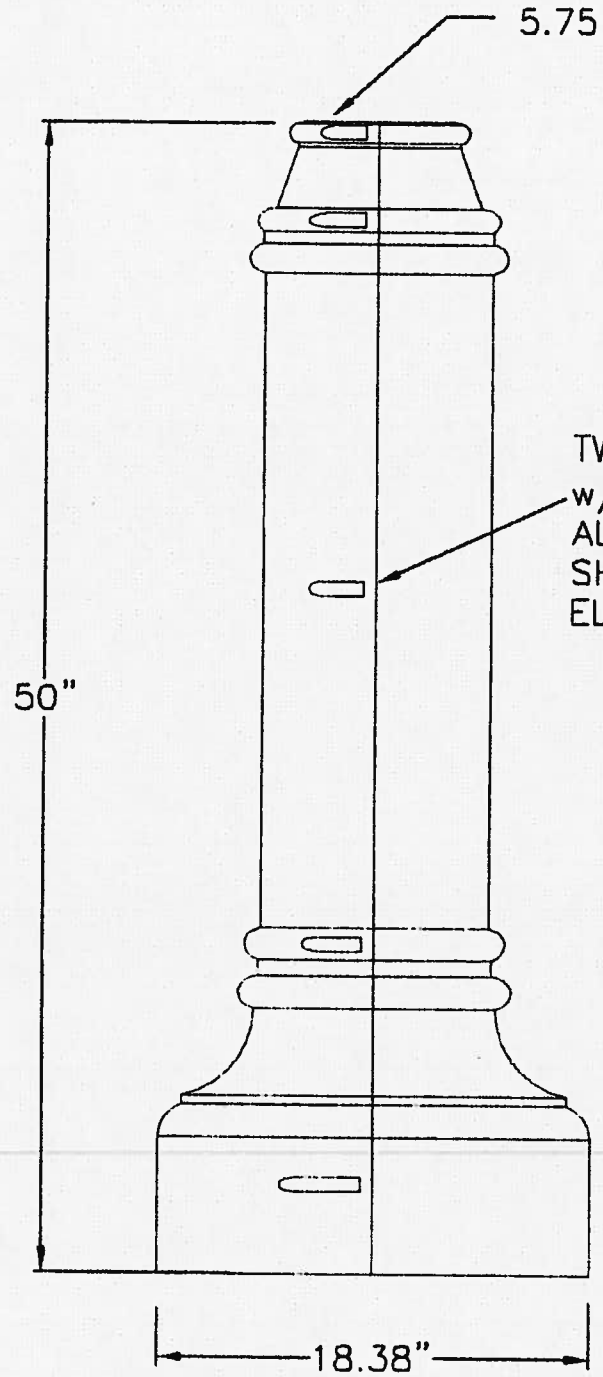

LEGACY™

PHILADELPHIA SHROUD

TWO PIECE SPLIT SHROUD w/SS SCREWS AT 5 POSITIONS ALONG THE VERTICAL AXIS. SHROUD COMPOSITION IS ELASTOMERIC URETHANE

COLOR: CITY SCAPE GREEN
FINISH: TEXTURED

CMT
By valmont

CMT
145 Wood Street
Estill, SC 29918
800-416-4276
www.cmtpoles.com

PHILADELPHIA
ANCHOR BASE–SLIP OVER

CAT. NO.: LPH(W)	
SPECS:	WIND VEL.:
TOT. LENGTH: NA	LUM. WEIGHT:
EMBED. DEPTH: NA	LUM. EPA:
TIP DIA:	STATIC DEFL.:
WEIGHT: 19lbs	TOTAL DEFL.:
DRAWN BY: PLF	DATE: 02/25/2015

QUANTITY: —
JOB NUMBER: —
PO NUMBER:
REF:

REV	DATE	BY	REMARKS
C	0/08/2014	PLF	CHANGE DOOR HEIGHT
D	02/25/2015	PLF	ELATOMERIC SHROUD/NO DOOR

Drawing for Item 2.2.30.1 & 2.2.30.2- CC# 31010 052 073 & 31010 052 073 00

1) TWIST LOCK PHOTO CELL: WIRED FOR 208V THROUGH 240V

2) 7-PIN TWIST LOCK PHOTO CELL RECEPTACLE

3) BUNDLED POWER CABLES FROM PHOTO CELL RECEPTACLE (WIRED INTO DRIVER FOR DIMMING CONTROLS)

4) COOLCAST HEAT DISSIPATING ROOF: CAST ALUMINUM, 356 ALLOY, SECURED WITH (4) 10-24 ROUND HEAD MACHINE SCREWS

5) GASKET: MOLDED SILICONE TO SEAL ROOF TO GLOBE

6) UPPER CAGE RING: CAST ALUMINUM, 356 ALLOY

7) QUICK DISCONNECTS FOR WIRING OF LED LIGHT ENGINES

8) QUICK DISCONNECT SUPPLIED FOR DISCONNECTING ROOF ASSEMBLY FROM CAGE ASSEMBLY

9) DRIVER HOUSING: SPUN ALUMINUM SECURED WITH (3) 10-24 ROUND HEAD PHILLIPS MACHINE SCREWS

10) SURGE PROTECTOR: 10kV PROTECTION

11) GASKET: MOLDED SILICONE TO SEAL GLOBE TO GLOBE SEAT

12) STOP RING: CAST INTO FITTER

13) LUMINAIRE FITTER: CAST ALUMINUM, 356 ALLOY

14) POLE WIRE HARNESS: 10 GAUGE WIRES SUPPLIED WITH QUICK DISCONNECT FOR INCOMING POWER Min 16 Ft. Length

15) LUMINAIRE WIRE HARNESS: 14 GAUGE WIRES SUPPLIED WITH QUICK DISCONNECT FOR INCOMING POWER

16) LUMINAIRE GLOBE SEAT: CAST ALUMINUM, 356 ALLOY

17) LED DRIVER: 150W DRIVER WIRED AT 700mA (SPLIT CURRENT) WITH 0-10V DIMMING (PHILIPS (LEDMTA0700C210D0)

18) GLOBE: 199 STIPPLED ACRYLIC

19) LUMINAIRE CAGE STRUT: (4 PIECES) CAST ALUMINUM, 356 ALLOY

20) CROSSFIRE OPTICAL SYSTEM: INJECTION MOLDED REFRACTIVE OPTICS

21) CREE XT-E LED - 54 CHIPS PER BOARD TO PRODUCE A 120 WATT SYSTEM

22) DECORATIVE DENTAL RING: (2 PIECES) CAST ALUMINUM, 356 ALLOY

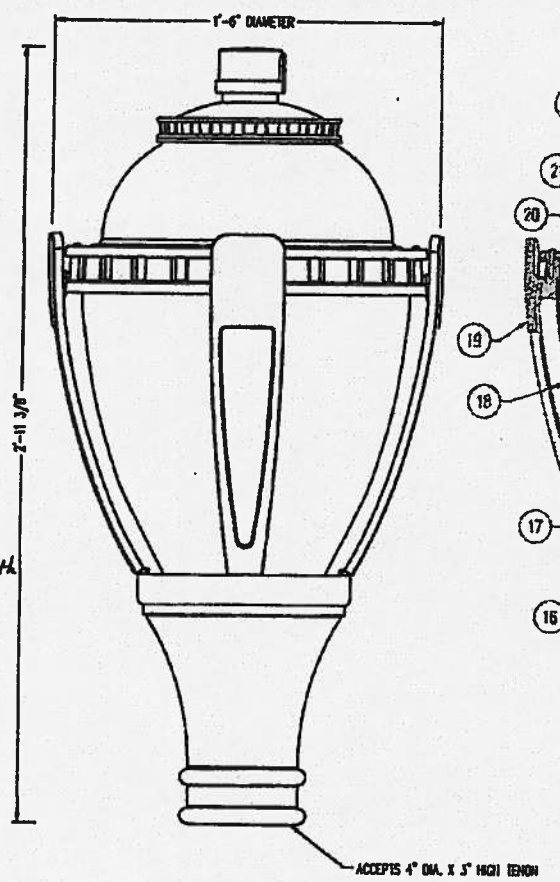

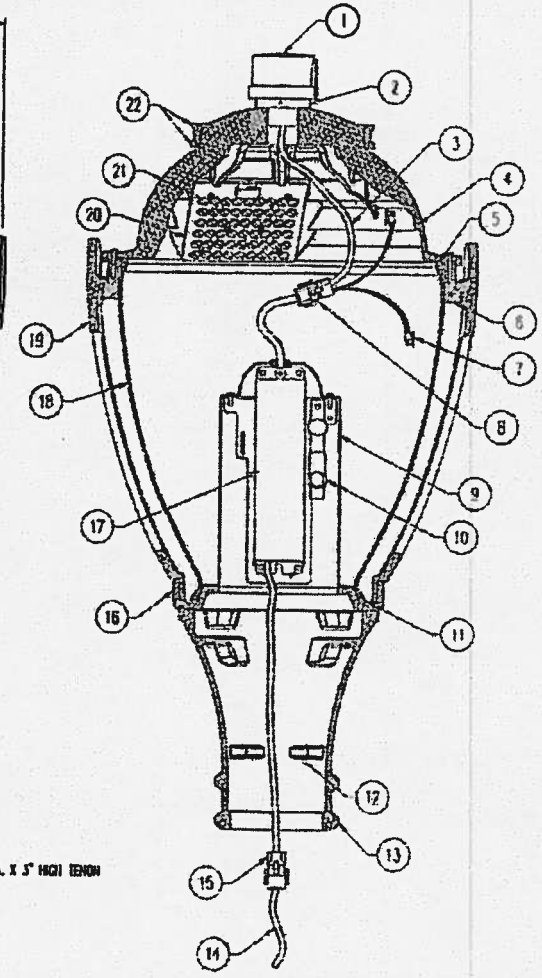

This drawing is property of Spring City Elect. Mfg. and is issued to the recipient with the understanding that it shall not be copied, duplicated, passed on to unauthorized parties, nor used for any purpose other than that for which it is specifically furnished except with Spring City's written permission.

CITY OF PHILADELPHIA
STREETS DEPARTMENT
APPROVED
CHIEF ST. LTG & TRAFFIC ENGINEER.
w/ COMMENTS 7/21/15

LUMINAIRE SPECIFICATIONS:

STYLE:	CENTER CITY WITH ACORN FINIAL
HEIGHT:	2'-11 3/8"
WIDTH:	1'-6" DIAMETER
MATERIAL:	CAST ALUMINUM ALLOY ANSI 356 PER A.S.T.M. B26-95
FINISH:	PRIME PAINT INSIDE AND OUTSIDE THEN FINISH PAINT, SHERWIN WILLIAMS ACROLON - CITYSCAPE GREEN
LAMPING:	120 WATT LED
VOLTAGE:	ELECTRONIC WIRED AT 120-277 VOLTS
COLOR TEMP:	4500K (NEUTRAL WHITE)
OPTICS:	TYPE III CROSSFIRE REFRACTIVE OPTICS (ASYMMETRIC DISTRIBUTION)
GLOBE:	199 STIPPLED ACRYLIC
MODIFIER:	7-PIN TWIST LOCK DIMMING RECEPTACLE
DIMMING:	0-10V
SURGE PROTECTION:	10kV

CATALOG NO.: ALMCTR-LE120D/EVX/X2-45-CR3-YS19-TR7P-CW

QUANTITY 100 REQUIRED
PER S.O. # 015468

Spring City Electrical Mfg. Co.
HALL AND MAIN STREETS - P.O. BOX 19 - SPRING CITY, PA. 19475
PHONE (610) 948-4000 - FAX (610) 948-5577 - WWW.SPRINGCITY.COM

DESCRIPTION	THE CENTER CITY LED LUMINAIRE		
CUSTOMER JOB			
SCALE N.T.S.	DRAWN BY: MWG	DATE 06-12-15	DRAWING NO. FIX-29264

Drawing for Items 2.2.31.1 & 2.2.31.2- CC# 31010 050 029 & 31010 050 024

Ben Franklin Pkwy Pole

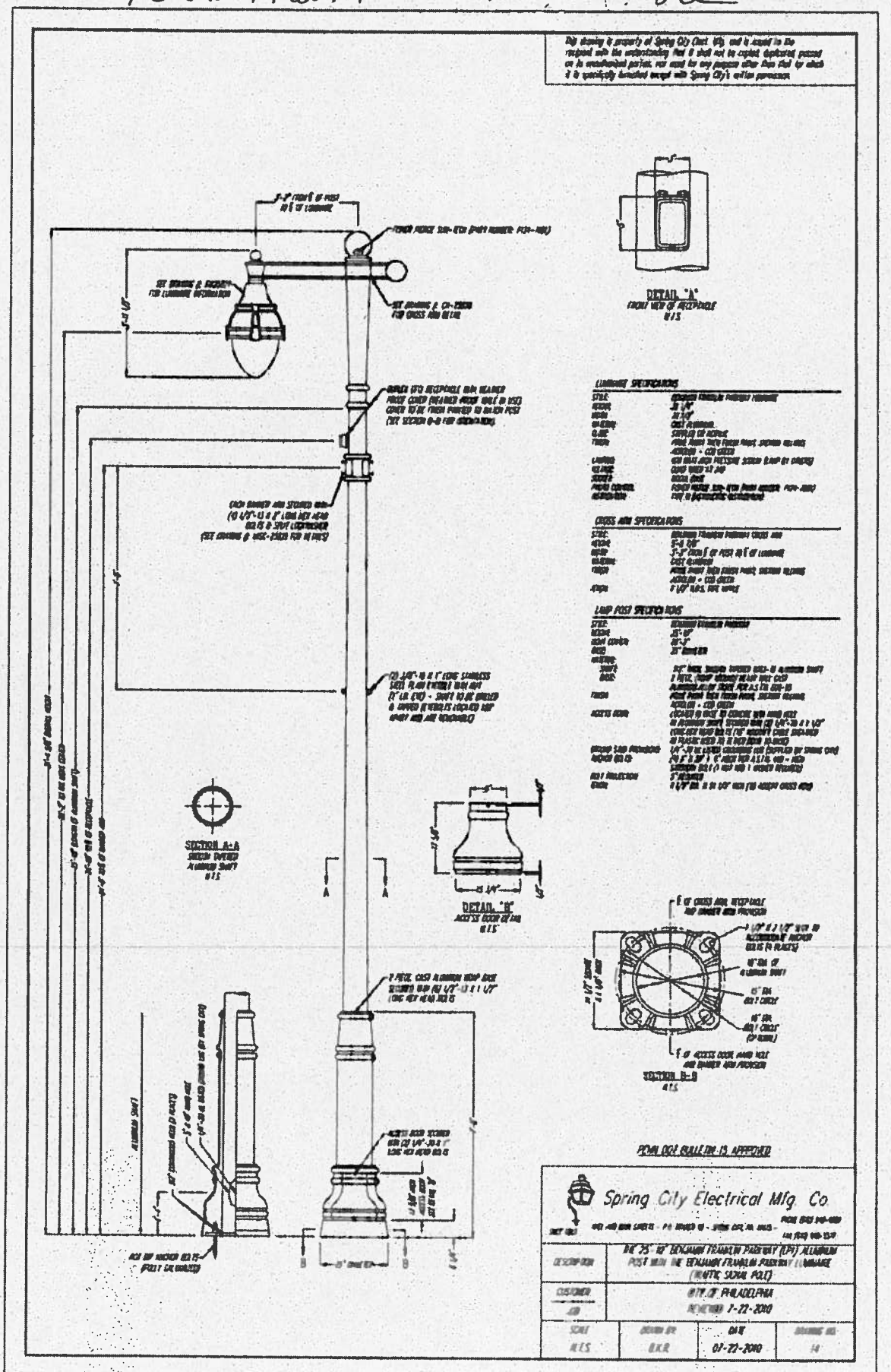

Drawing for Item 2.2.32.1- CC# 31010 050 025 page 1 of 2

Ben Franklin Pkwy - Banner Arm

This drawing is property of Spring City Elect. Mfg. and is issued to the recipient with the understanding that it shall not be copied, duplicated, passed on to unauthorized parties, nor used for any purpose other than that for which it is specifically furnished except with Spring City's written permission.

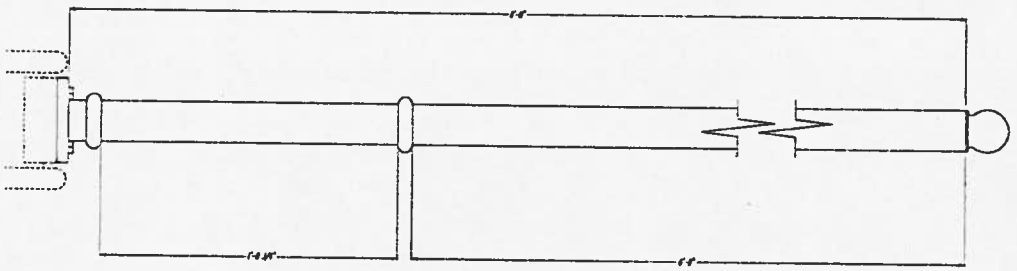

8'-0" BANNER ARM

(Must be installed as singles only)

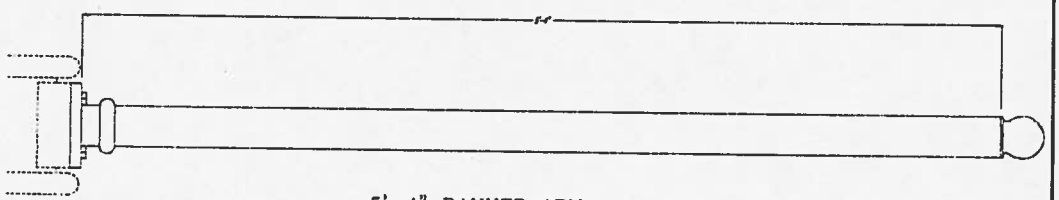

5'-4" BANNER ARM

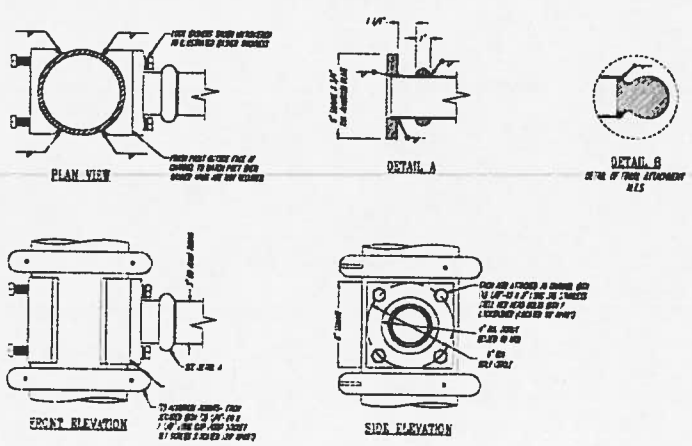

PENN DOT BULLETIN 15 APPROVED

Spring City Electrical Mfg. Co.

DESCRIPTION	BANNER ARM ATTACHMENT INFORMATION FOR DRAWINGS # LP-25812 & LP-25815
CUSTOMER JOB	CITY OF PHILADELPHIA REVIEWED 7-22-2010

SCALE	DRAWN BY	DATE	DRAWING NO.
N.T.S.	B.K.R.	07-01-03	20

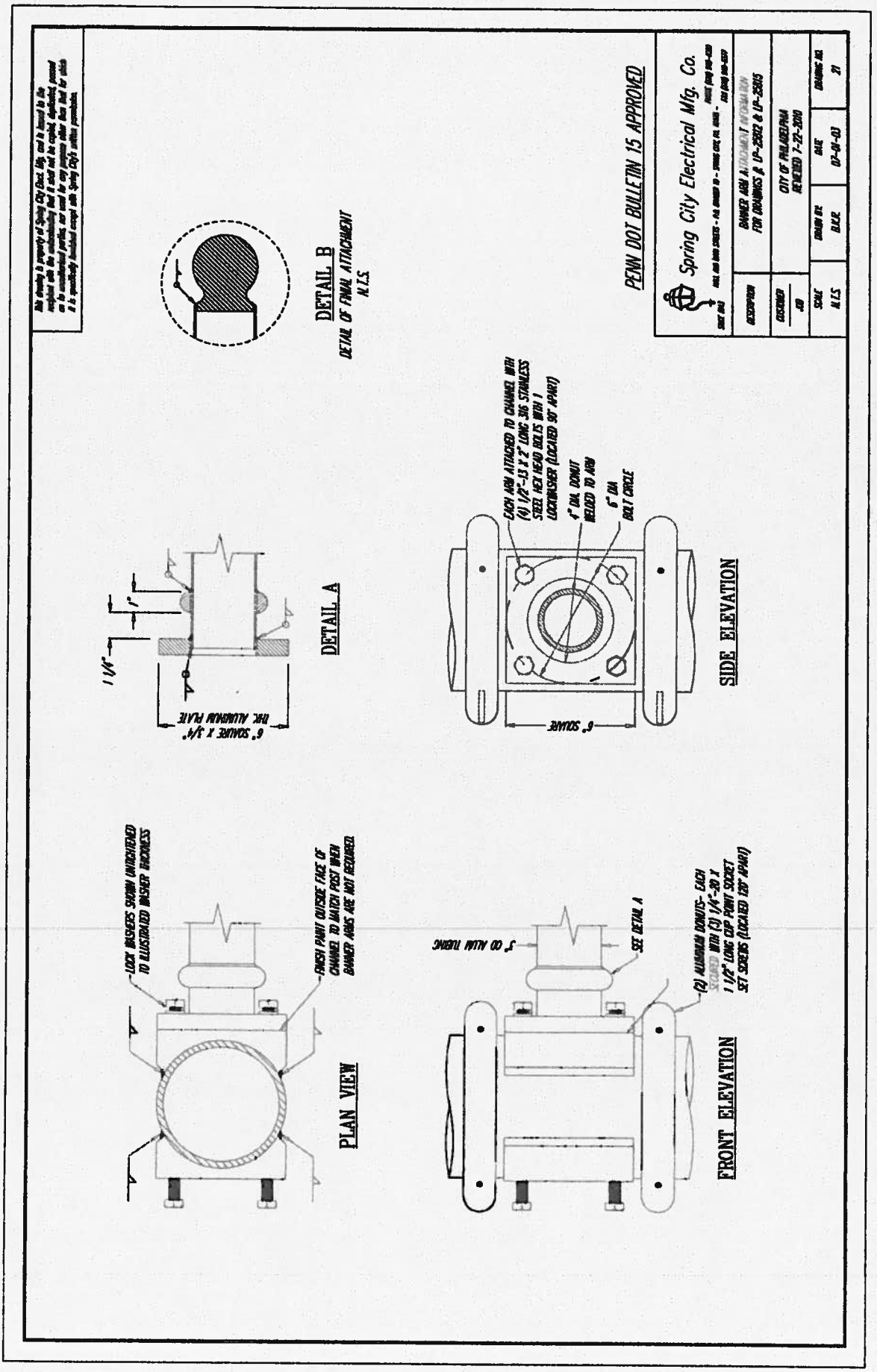
PENN DOT BULLETIN 15 APPROVED
Spring City Electrical Mfg. Co.
DESCRIPTION
BANNER ARM ATTACHMENT INFORMATION FOR DRAWINGS # LP-5802 & LP-5805
DESIGNED AB
CITY OF PHILADELPHIA REVISED 7-22-2010
SCALE N.T.S.
DRAWN BY BLKE
DATE 02-01-03
DRAWING NO. 21
DETAIL B
DETAIL OF FINAL ATTACHMENT N.T.S
DETAIL A
6" SQUARE X 1/4" THK. ALUMINUM PLATE
1"
1 1/4"
SIDE ELEVATION
EACH ARM ATTACHED TO CHANNEL WITH (4) 1/2"-13 X 2" LONG 316 STAINLESS STEEL HEX HEAD BOLTS WITH 1 LOCKWASHER (LOCATED 90° APART)
4" DIA. DONUT WELDED TO ARM
6" DIA BOLT CIRCLE
6" SQUARE
PLAN VIEW
LOCK WASHERS SHOWN UNTIGHTENED TO ILLUSTRATED WASHER THICKNESS
FINISH PAINT OUTSIDE FACE OF CHANNEL TO MATCH POST WHEN BANNER ARMS ARE NOT REQUIRED
FRONT ELEVATION
3" OD ALUM TUBING
SEE DETAIL A
(2) ALUMINUM DONUTS- EACH SECURED WITH (3) 1/4"-20 X 1 1/2" LONG ZIP POINT SOCKET SET SCREWS (LOCATED 120° APART)

Drawing for Item 2.2.33- CC# 31010 050 026

Ben Franklin Pkwy - Cross Arm

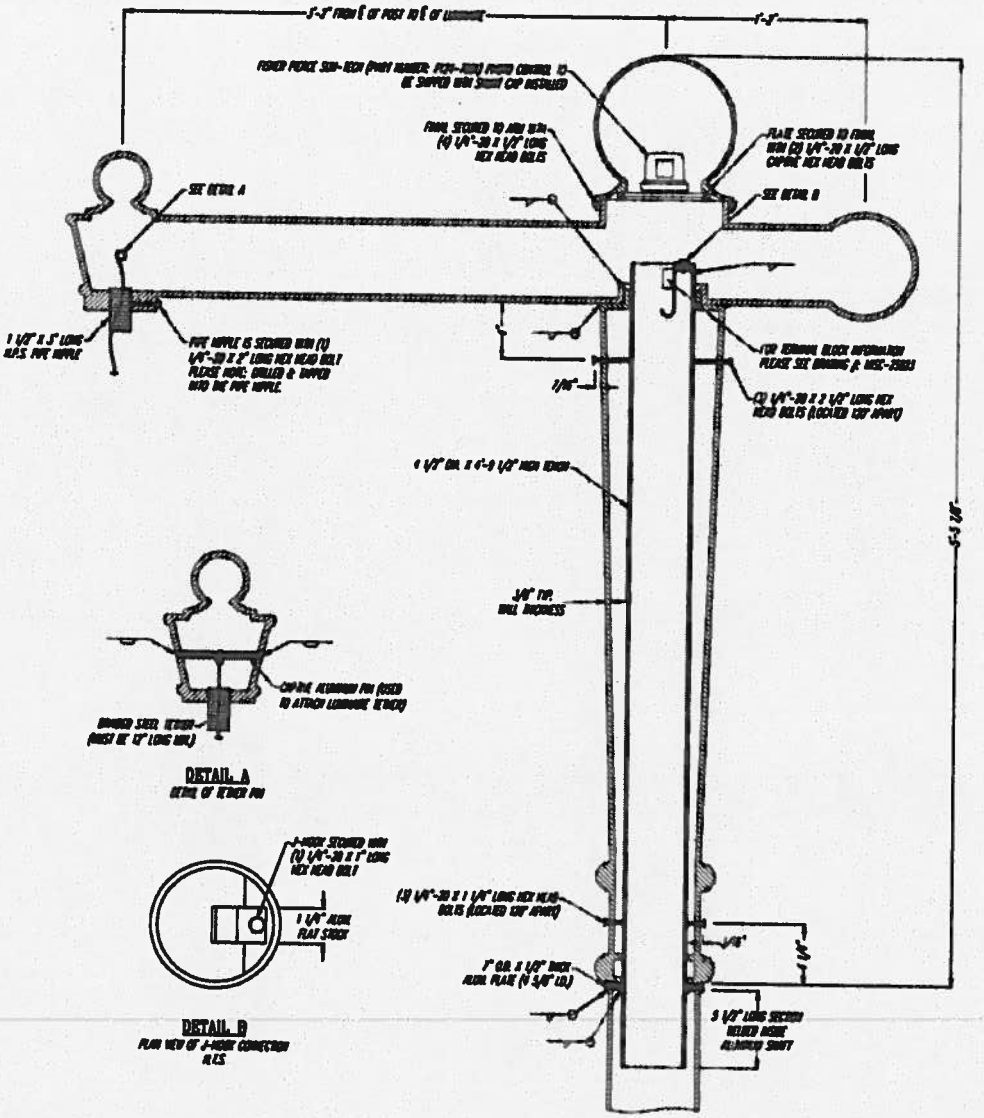

PENN DOT BULLETIN 15 APPROVED

Spring City Electrical Mfg. Co.

DESCRIPTION	CONSTRUCTION DRAWING FOR THE BENJAMIN FRANKLIN PARKWAY CROSS ARM
CUSTOMER / JOB	CITY OF PHILADELPHIA REVIEWED 7-22-2010
SCALE: N.T.S.	DRAWN BY: B.K.R.
DATE: 05-19-03	DRAWING NO.: 27

Drawing for Items 2.2.34.1 & 2.2.34.2- CC# 31010 050 022 & 31010 050 022 01

Ben Franklin Navy - Luminaire

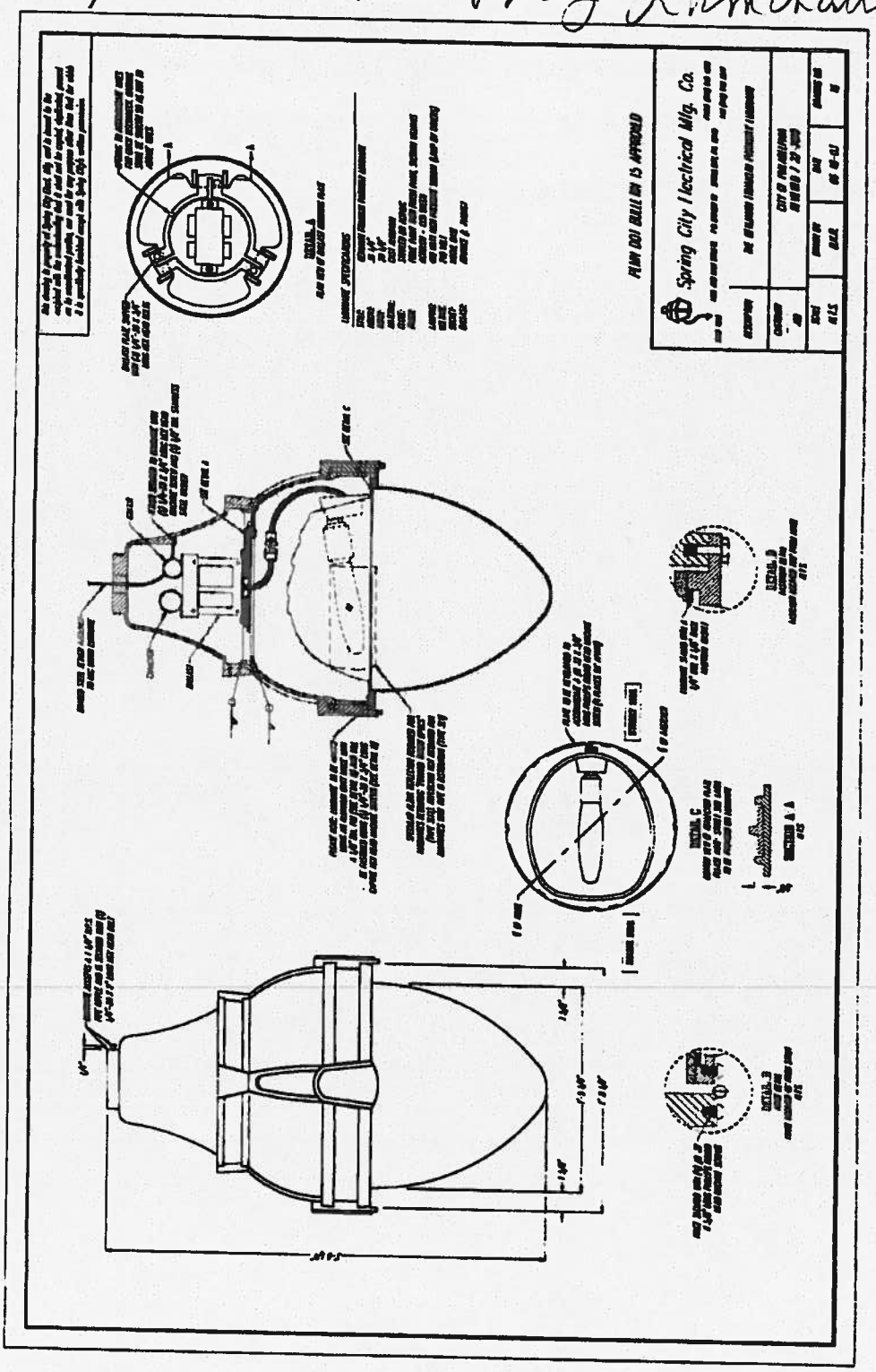

Drawing for Item 2.2.36- CC# 31051 001 007

AGENCY: Illumination, Inc.
PROJECT: City of Philadelphia-City Parkway
QUOTE#: 251709

BASE COVER

Model: LP25815
Style: Clam shell
Material: Elastomeric Urethane
Color: Customer to specify
Height: 85"
Width: 26.3"
Weight: 95 lbs approx.
Hardware: Stainless steel 1/4-20 inserts and screws

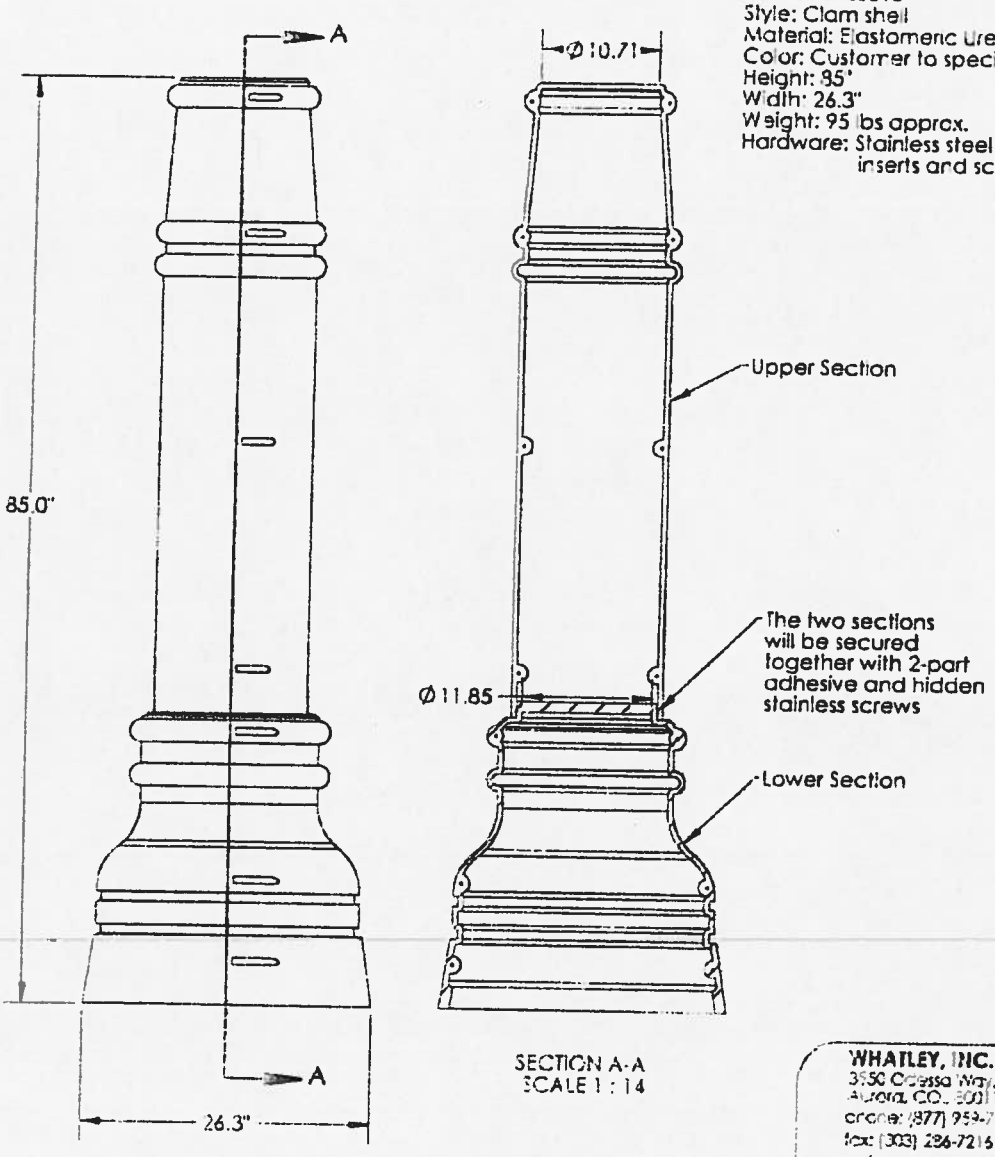

SECTION A-A
SCALE 1 : 14

WHATLEY, INC. A Vaimant Company
3550 Odessa Way, STE A
Aurora, CO. 80011
phone: (877) 959-7678
fax: (303) 286-7216
web: www.whatley.com

REV	DESCRIPTION	DATE

PART NO. LP25815
DESCRIPTION: Proposed Base Cover
SCALE: 1:14
SIZE: A
REV
MATERIAL: Noted
FINISH: TBD

DO NOT SCALE DRAWING

DOCUMENTATION	INITIAL	DATE
DRAWN	JTC	5/9/14
QUOTE REQUEST		
PRICING REQUEST		
FIRST ARTICLE REQUEST		
FIRST ARTICLE INSPECTION		
INSPECTION SURVEY		

UNLESS OTHERWISE NOTED:
DIMENSIONS ARE IN INCHES
TOLERANCES:

PROPRIETARY AND CONFIDENTIAL
THE INFORMATION CONTAINED IN THIS DRAWING IS THE SOLE PROPERTY OF WHATLEY, INC. ANY REPRODUCTION IN PART OR AS A WHOLE WITHOUT THE WRITTEN PERMISSION OF WHATLEY, INC. IS PROHIBITED.

Drawing for Items 2.2.37.1 & 2.2.37.2- CC# 31010 052 113 & 31010 052 113 00

Franklin Luminaire

This drawing is property of Spring City Elect. Mfg. and is issued to the recipient with the understanding that it shall not be copied, duplicated, passed on to unauthorized parties, nor used for any purpose other than that for which it is specifically furnished except with Spring City's written permission.

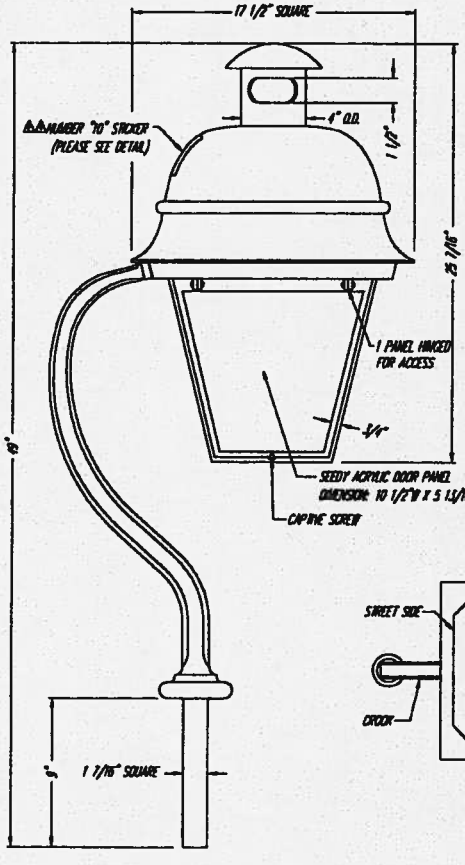

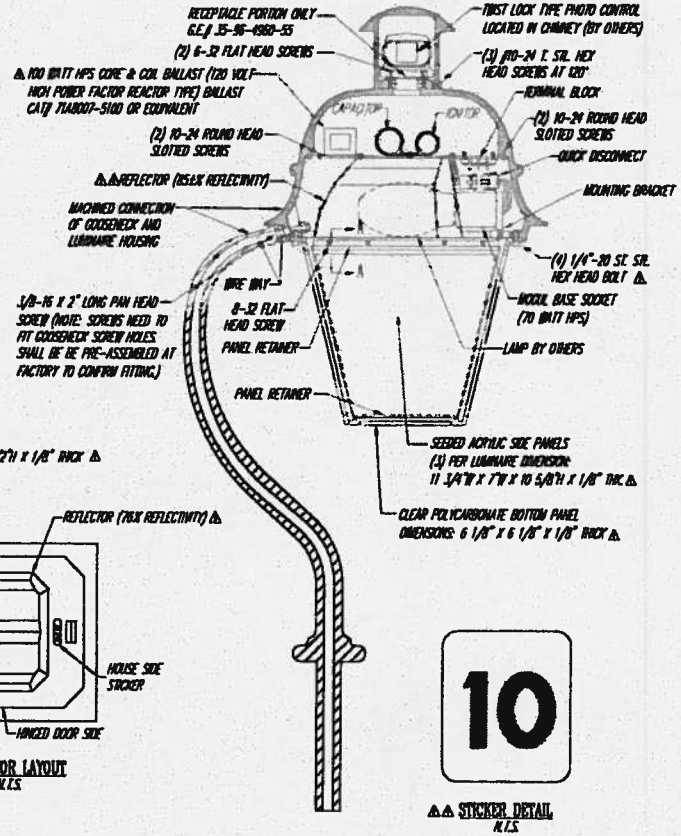

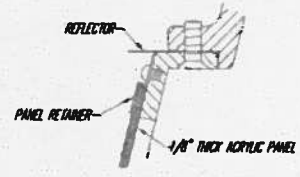

SECTION A-A
PANEL RETAINER DETAIL
N.T.S.

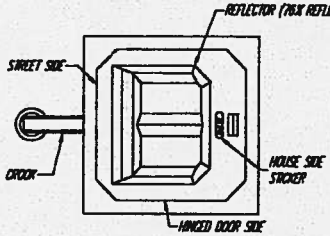

REFLECTOR LAYOUT
N.T.S.

⚠⚠ STICKER DETAIL
N.T.S.

LUMINAIRE SPECIFICATIONS

STYLE:	FRANKLIN-#4
HEIGHT:	25 7/16"
WIDTH:	17 1/2"
MATERIAL:	CAST ALUMINUM
PANELS:	SEEDY ACRYLIC (ALL 4 SIDES) AND CLEAR POLYCARBONATE BOTTOM
FINISH:	(SEE PAINT SPECIFICATIONS)
LAMPING:	⚠100 WATT HIGH PRESSURE SODIUM ED-23 (LAMP BY OTHERS)
BALLAST:	⚠⚠120 VOLT REACTOR TYPE BALLAST ADVANCED# 71A8007
SOCKET:	MODUL BASE
PHOTO CONTROL:	RECEPTACLE MUST BE ANSI STANDARD (PHOTO CELL BY OTHERS)
DISTRIBUTION:	TYPE III, ASYMMETRIC DISTRIBUTION, CUTOFF

⚠NOTE: FIXTURE/CROCK ASSEMBLY SUPPLIED WITH 10'-0" OF 10 GUAGE STRANDED COPPER LEAD WIRES (3) CONDUCTOR - THWN: BLACK, WHITE, & GREEN

⚠ REVISED BY: B.K.R.	DATE: 05-10-06	
⚠ REVISED BY: B.K.R.	DATE: 03-23-06	
⚠ REVISED BY: B.K.R.	DATE: 02-23-06	
⚠ REVISED BY: B.K.R.	DATE: 11-29-05	
⚠ REVISED BY: B.K.R.	DATE: 09-23-05	
⚠ REVISED BY: D.A.K.	DATE: 09-05-03	

Spring City Electrical Mfg. Co.
DIRECT 1913
MAIN AND HIGH STREETS - P.O. BOX 19 - SPRING CITY, PA. 19475
PHONE (610) 948-4000
FAX (610) 948-5537

DESCRIPTION	CITY OF PHILADELPHIA 1#E FRANKLIN TYPE III CUTOFF-#4 GOOSENECK STREET LIGHT
CUSTOMER / JOB	CITY OF PHILADELPHIA, SOCIETY HILL

SCALE	DRAWN BY:	DATE	DRAWING NO.
N.T.S.	D.A.K.	05-28-03	FIX-25518

PRIME PAINT:	SHERWIN WILLIAMS 2 PART RECOATABLE EPOXY PRIMER (B67W15 - PART C AND B67V15 - PART A)
FINISH PAINT:	SHERWIN WILLIAMS ACROLON - CLASSIC BLACK OR EQUAL PAINT COLOR # 6A023613

QUANTITY .... 1 COMPLETE UNIT REQUIRED
PER S.O. #: 170062

Drawing for Items 2.2.38.1 & 2.2.39.1- CC# 31010 052 108 & 31010 052 112

Franklin Pole

This drawing is property of Spring City Elect. Mfg. and is issued in the recipient with the understanding that it shall not be copied, duplicated, passed on to unauthorized parties, nor used for any purpose other than that for which it is specifically furnished except with Spring City's written permission.

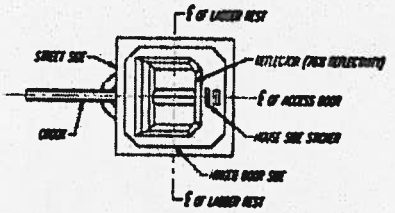

REFLECTOR LAYOUT DETAIL
N.T.S.

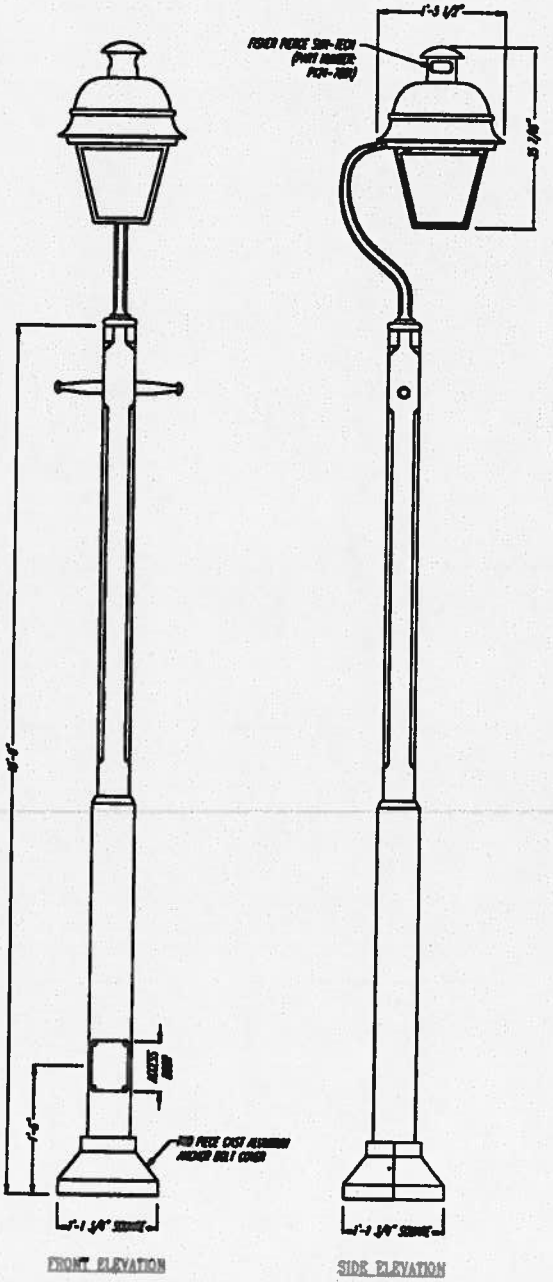

FRONT ELEVATION

SIDE ELEVATION

LUMINAIRE SPECIFICATIONS

STYLE:	FRANKLIN GOOSENECK (GN)
HEIGHT:	25 3/8"
WIDTH:	17 1/4"
MATERIAL:	CAST ALUMINUM
PANELS:	STATED ACRYLIC (3 SIDES AND DOOR) AND CLEAR POLYCARBONATE (BOTTOM)
FINISH:	PRIME POINT DUCH FINISH PAINT, SHERWIN WILLIAMS ACROLON - CLASSIC BLACK
LAMPING:	100 WATT HIGH PRESSURE SODIUM (S)-33 (LAMP BY OWNER)
BALLAST:	240 VOLT REACTOR TYPE BALLAST ADVANCE [illegible] THERMAL
SOCKET:	MEDIUM BASE
DISTRIBUTION:	TYPE III CUTOFF OPTICS (ASYMMETRIC DISTRIBUTION)
CATALOG NO.:	AUSTIN-AH-APH10/SH/SH-P100-MC3-FHC-H-CR

LAMP POST SPECIFICATIONS

STYLE:	FRANKLIN (FOR LARGER BASE AND ANCHOR BOLT COVER)
HEIGHT:	10'-0"
BASE:	11" SQUARE
MATERIAL:	1 PIECE, CAST ALUMINUM ALLOY A.N.S.I. 356, PER A.S.T.M. B26-85
FINISH:	PRIME POINT DUCH FINISH PAINT, SHERWIN WILLIAMS ACROLON - SOCIETY HILL RED
ACCESS DOOR:	SECURED WITH STAINLESS STEEL HEX HEAD CAP SCREWS
GROUND STUD PROVISIONS:	DRILL AND TAP INSIDE WALL OF BASE OPPOSITE ACCESS DOOR TO ACCOMMODATE A 1/4"-20 GROUND STUD (GROUND STUD SUPPLIED BY OWNER)
ANCHOR BOLTS:	(4) 1" DIA. X 36" LONG + 6" HOOK (FULLY GALVANIZED WITH 1 GALVANIZED NUT AND 1 GALVANIZED WASHER PER BOLT)
BOLT PROJECTION:	3" REQUIRED
ENTRY:	1 3/4" SQ. X 8" DEEP HOLE (TO ACCEPT REVERSE ENTRY)
POST CATALOG NO.:	AP5FHN-11-10A-[illegible]/A10-[illegible]/HSS-CR
COVER CATALOG NO.:	AUSTIN-H-CR

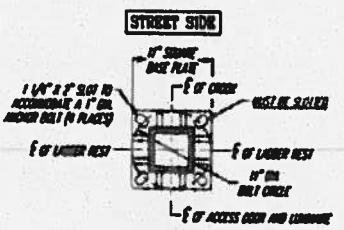

SECTION A-A
N.T.S.

PENN DOT BULLETIN 15 APPROVED

Spring City Electrical Mfg. Co.
[illegible]

DESCRIPTION	10' FRANKLIN 10'-0" LAMP POST WITH 25" FRANKLIN GOOSENECK - GN (TYPE III CUTOFF) LUMINAIRE
CUSTOMER: ADD	CITY OF PHILADELPHIA, PA SOCIETY HILL REVISED 7-22-2008

SCALE	DRAWN BY:	DATE	DRAWING NO.
N.T.S.	D.K.D.	03-01-10	10